INSTRUCTION MANUAL
FOR
MODEL 4220-S/3
N00104-89-D-0052
7Z6625-01-311-3742
and
MODEL 4220-S/4
N00104-89-D-0053
7Z6625-01-310-0802

GREAT LAKES SSC

THIS MANUAL APPLIES TO UNITS WITH SERIAL NUMBERS 41002BG AND ABOVE.

BOONTON
ELECTRONICS CORPORATION

791 ROUTE 10, RANDOLPH, NJ 07869
TELEPHONE: 201-584-1077 TWX: 710-986-8215
FAX: 201-584-3037

98101800A 12/89

BOONTON ELECTRONICS CORPORATION
INSTRUCTION MANUAL-SUPPLEMENT: MODEL 4220-S/3 AND 4220-S/4

OCTOBER, 1989

The following items are part of the S/3 and S/4 Configurations and are not contained in the Replaceable Parts List.

4220-S/3

Description	Fed. Code	Manufacturer Model Number	Qty.	BEC Part Number
Power Sensor	04901	51100-9E-S/1	1	95110093A
Power Sensor	04901	51013-4E-S/21	1	94002602A
Sensor Cable	04901	41-2A	2	09170501A
Transit Case	04901		1	95005401A

4220-S/4

Description	Fed. Code	Manufacturer Model Number	Qty.	BEC Part Number
Power Sensor	04901	51063-9E-S/1	1	95106391A
Power Sensor	04901	51033-6E	1	95103304A
Sensor Cable	04901	41-2A	2	09170501A
Transit Case	04901		1	95005401A

SENSOR CHARACTERISTICS

Model (Impedance) (RF Connector)	Freq. Range	PWR range (Watts) (dBm)	Overload Rating (Watts) (dBm)	Max. SWR		Drift and Noise Lowest Range		
				Frequency	SWR	Drift(typical) 1 Hr**	Noise(typical) RMS	2σ
DIODE SENSORS								
51013-4E-S/21 50 ohms N(M)	100kHz to 18GHz	1.0nW to 100mW -60 to +20dBm	300mW +25dBm	100kHz to 18GHz	1.40	150pW	65pW	130pW
51033-6E 50 ohms N(M)	100kHz to 18GHz	100nW to 2W -40 to +33dBm	2W +33dBm	100kHz to 1GHz 1GHz to 2GHz 2GHz to 4GHZ 4GHz to 12.4GHz 12.4GHz to 18GHz	1.07 1.10 1.12 1.18 1.28	15nW	6.5nW	13nW
THERMOCOUPLE SENSORS								
51100-9E-S/1 50 ohms N(M)	10MHz to 18GHz	1.0uW to 100mW -30 to +20dBm	300mW +25dBm*	10MHz to 18GHz	1.40	200nW	100nW	200nW
51063-9E-S/1	100kHz to 4.2GHz	1mW to 3W 0 to +35dBm	3.5W (Avg) 100Wpk 100Wus	100KHz to 4.2GHz	1.30	20uW	10uW	20uW

(see page 1-4 for NOTES)

BOONTON ELECTRONICS CORPORATION
INSTRUCTION MANUAL-SUPPLEMENT: MODEL 4220-S/3 AND 4220-S/4

OCTOBER, 1989

Instruction-manual supplements are issued as required to correct errors in a manual, and to adapt the manual to changes made after its printing.

1. Replace paragraph 2-14.f. with the following:

   Verify that "FrE" is shown on the dB CAL FACTOR display, and "OFF" is shown on the main data display. The main data display can be incremented and decremented using the up/down keys.

2. Add the following sentence to paragraph 3-12.b:

   "OFF" is shown on the main data display if no frequency value has been entered.

3. In paragraph 3-26. under the **Default Value** column add the word **"OFF"** after 0.00 GHz.

4. Add the following column to the right of "Model No." in TABLE 6-1 Test Equipment List.

Item No.*	Minimum Use Specifications	
1	Frequency Range :	DC-100MHz
	Sensitivity :	.01 V/Div
2	Voltage Range :	100mV to 100V
	Resolution :	1mV
	Accuracy :	0.01%
3	Output :	9, 90, 900 uV 9, 90, 900 mv and 4.5V balanced
	Accuracy :	9uV ±1% 90uV ± .4% All others ± .2%
	Output Impedance:	500K
4	Accuracy :	.01%
	Frequency Range :	10 Hz to 100 MHz
5	Accuracy :	.015 dB
	Frequency :	DC to 300 MHz
	Level :	0.00 dBm

Item No.*	Minimum Use Specifications		
6	Connectors	:	Type N
	Resolution	:	50 ohms ± 1%
	Frequency	:	DC to 1 GHz
7	Frequency	:	30 MHz ± 0.1%
	Level	:	-70 to +20 dBm in 0.1 dB steps into 50 ohms
	VSWR	:	1.05
	Impedance	:	50 ohms

*Provided for reference only and is not part of the new column

5. Replace paragraphs 6-15 through 6-20 with the following:

6-15. 4220 Performance Tests

6-16. Perform the following tests on an annual basis or as frequently as required to verify proper instrument operation.

6-17. Perform the Preliminary Checks listed in section 2-14 a through z.

6-18. Calibration Accuracy Test.

a. Connect a sensor to the 4220.
b. Select the Sensor Number for the sensor to be tested and verify that the sensor model and serial number are correct.
c. Connect Boonton coaxial sensors to a Boonton model 2520 RF calibrator, or equivalent. If the sensor is a waveguide sensor, connect it to some other accurate and stable RF signal source.
d. The frequency of the Boonton model 2520 RF calibrator is fixed at 30 MHz which is the reference frequency for Boonton coaxial sensors. For waveguide sensors, set the frequency of the RF signal source to the reference frequency listed in tables 1-3 and 1-4.
e. Set the 4220 to dBm Display mode.
f. Set the calibrator to -70.0 dBm, OUTPUT OFF.
g. Allow warm up and settling time of at least 15 minutes.
h. Press the ZERO key on the 4220. Verify a zero acquisition. The 'LO' message should appear on the display.
i. Adjust the calibrator output to each of the power levels listed in table 6-1.A. or 6-1.B. Tabulate the 4220's displayed readings versus calibrator output levels.

j. Verify that the 4220 readings agree with the calibrator output level to within the required accuracy. Calculate the required accuracy of the reading for each dBm level as follows:

ACCURACY = TABLE ENTRY + SOURCE ERROR + SHAPING ERROR

The TABLE ENTRY is listed in table 6-1.A. or 6-1.B. for each power level.

The SOURCE ERROR for the Boonton 2520 is listed in table 6-1.A. for each power level. For the Boonton 25A the SOURCE ERROR is .05 dB for all levels. Consult the specification sheets of other manufacturer's RF signal sources for their source errors.

The 4220 SHAPING ERROR is typically .04 dB. See Table 1-2 notes.

6-19. 50 MHz Calibrator Performance Tests

6-20. The 50 MHz 0dBm calibrator is checked using a Wandel & Goltermann model EPM-1 Milliwatt Test Set, or equivalent National Institute of Standards and Technology (NIST) traceable power meter. NIST was formerly the National Bureau of Standards (NBS).

The procedure is as follows:

a. Allow the equipment to warm up and stabilize for 30 minutes. The 4220 "CAL" annunciator should be set on.
b. Connect the EPM-1 thermistor power head to the 0 dBm output port on the EPM-1 test set. Adjust per the manufacturers instructions for a 0 dBm reading on the analog meter.
c. Disconnect the thermistor power head from the EPM-1 test set and connect it to the 4220 50 MHz calibrator.
d. Observe the EPM-1 analog meter. The indication should be 0 dBm +/- .05 dB.
e. Disconnect the EPM-1.
f. Measure the output frequency of the 50 MHz calibrator. It should be 50 MHz +/- 0.75 MHz.

Table 6-1.A. Calibration Accuracy for Coaxial Sensors

----------LIMITS FOR SENSOR MODELS IN dB---------

Power Level dBm	51012 51011 51013	51051	51015	51033	51100	Model 2520 Source Error dB
-60	0.75	0.40				0.17
-55	0.40	0.20				0.11
-50	0.20	0.11	0.75			0.11
-45	0.09	0.09	0.40			0.11
-40	0.09	0.09	0.20	0.75		0.07
-35	0.06	0.06	0.09	0.40		0.07
-30	0.06	0.06	0.07	0.20	0.90	0.07
-25	0.06	0.06	0.06	0.09	0.32	0.07
-20	0.06	0.06	0.06	0.06	0.13	0.07
-15	0.06	0.06	0.06	0.06	0.07	0.07
-10	0.06	0.06	0.06	0.06	0.05	0.07
- 5	0.06	0.06	0.06	0.06	0.05	0.07
0	0.04	0.04	0.04	0.04	0.04	0.05
+ 5	0.06	0.06	0.06	0.06	0.05	0.07
+10	0.06	0.06	0.06	0.06	0.04	0.07
+15	0.06		0.06	0.06	0.05	0.07
+20	0.06		0.06	0.06	0.04	0.07
+25			0.08	0.08		
+30			0.09	0.09		
+33				0.10		

Table 6-1.B. Calibration Accuracy for Waveguide Sensors

----------LIMITS FOR SENSOR MODELS IN dB----------

dBm Level	51035 51036 51072	51037 51045	51046 51047			
-50	0.75	0.80	0.90			
-45	0.62	0.75	0.82			
-40	0.50	0.70	0.71			
-35	0.42	0.62	0.66			
-30	0.36	0.56	0.61			
-25	0.31	0.51	0.56			
-20	0.26	0.46	0.51			
-15	0.31	0.51	0.56			
-10	0.36	0.56	0.61			
- 5	0.41	0.61	0.66			
0	0.46	0.66	0.71			
+ 5	0.51	0.71	0.76			
+10	0.56	0.76	0.81			

SAFETY SUMMARY

The following general safety precautions must be observed during all phases of operation and maintenance of this instrument. Failure to comply with these precautions or with specific warnings elsewhere in this manual violates safety standards of design, manufacture, and intended use of the instrument. Boonton Electronics assumes no liability for the customer's failure to comply with these requirements.

THE INSTRUMENT MUST BE GROUNDED

To minimize shock hazard the instrument chassis and cabinet must be connected to an electrical ground. The instrument is equipped with a three conductor, three prong a.c. power cable. The power cable must either be plugged into an approved three-contact electrical outlet or used with a three-contact to a two-contact adapter with the (green) grounding wire firmly connected to an electrical ground at the power outlet.

DO NOT OPERATE THE INSTRUMENT IN AN EXPLOSIVE ATMOSPHERE.

Do not operate the instrument in the presence of flammable gases or fumes.

KEEP AWAY FROM LIVE CIRCUITS.

Operating personnel must not remove instrument covers. Component replacement and internal adjustments must be made by qualified maintenance personnel. Do not replace components with the power cable connected. Under certain conditions dangerous voltages may exist even though the power cable was removed; therefore, always disconnect power and discharge c' its before touching them.

DO NOT SERVICE OR ADJUST ALONE.

Do not attempt internal service or adjustment unless another person, capable of rendering first aid and resuscitation, is present.

DO NOT SUBSTITUTE PARTS OR MODIFY INSTRUMENT.

Do not install substitute parts or perform any unauthorized modification of the instrument. Return the instrument to Boonton Electronics for repair to ensure that the safety features are maintained.

SAFETY SYMBOLS

This safety requirement symbol (located on the rear panel) has been adopted by the International Electrotechnical Commission, Document 66 (Central Office) 3, Paragraph 5.3, which directs that the instrument be so labeled if, for the correct use of the instrument, it is necessary to refer to the instruction manual. In this case it is recommended that reference be made to the instruction manual when connecting the instrument to the proper power source. Verify that the correct fuse is installed for the power available, and that the switch on the rear panel is set to the applicable operating voltage.

CAUTION

The CAUTION sign denotes a hazard. It calls attention to an operation procedure, practice, or the like, which, if not correctly performed or adhered to, could result in damage to or destruction of part or all of the equipment. Do not proceed beyond a CAUTION sign until the indicated conditions are fully understood and met.

WARNING

The WARNING sign denoted a hazard. It calls attention to an operation procedure, practice, or the like, which, if not correctly performed or adhered to, could result in injury or loss of life. Do not proceed beyond a WARNING sign until the indicated conditions are fully understood and met.

Indicates dangerous voltages.

TABLE OF CONTENTS

SECTION I -- GENERAL INFORMATION

Paragraph		Page
1-1	Introduction	1-1
1-3	Description	1-1
1-5	Features	1-1
1-6	Power Sensors	1-1
1-10	Simple Instrument Setup and Operation	1-1
1-11	Alphanumeric Displays	1-1
1-12	Selectable Ranging	1-1
1-13	Selectable Filtering	1-2
1-14	Zeroing	1-2
1-15	Built-In Precision Calibration	1-2
1-16	Analog Display	1-2
1-17	Chart Recorder Output	1-2
1-18	GPIB (Optional)	1-2
1-19	Accessories	1-2
1-21	Options	1-2
1-23	Specifications	1-2

SECTION II -- INSTALLATION

Paragraph		Page
2-1	Introduction	2-1
2-3	Unpacking	2-1
2-5	Mounting	2-1
2-7	Power Requirements	2-1
2-9	Connections	2-2
2-10	Sensor	2-2
2-11	Recorder	2-2
2-12	GPIB	2-2
2-13	Preliminary Check	2-2

SECTION III -- OPERATION

Paragraph		Page
3-1	Introduction	3-1
3-3	Operating Controls, Indicators and Connectors	3-1
3-5	Operating The Instrument	3-1
3-7	Sensor Connection	3-4
3-9	Measurement Parameter Selection	3-4
3-10	Sensor Selection	3-4
3-11	Range Selection	3-4
3-12	Frequency Selection	3-4
3-13	Filter Selection	3-4
3-14	Reference Level Selection	3-4
3-15	dB Calibration Factor Entry	3-5
3-16	Bus Address Selection (IEEE-488 Option Only)	3-5
3-17	Zeroing The Instrument	3-5
3-19	Calibrating The Instrument	3-5
3-21	Making A Measurement	3-5
3-23	GPIB Operation	3-6
3-25	Intializing the Instrument	3-6

SECTION IV -- APPLICATION NOTES

Paragraph		Page
4-1	Introduction	4-1
4-3	Sensor Calibration	4-1
4-4	General	4-1
4-5	14-Point Linearity Data	4-1
4-7	High Frequency Calibration Points	4-1
4-9	Zeroing	4-1
4-16	Dynamic Range	4-4
4-18	Filtering	4-4
4-22	Noise	4-5
4-23	Noise Reduction	4-5
4-25	Error Computation	4-5
4-27	Noise Error Examples	4-5
4-28	Integration of Power	4-5
4-29	Clearing of Filter	4-5
4-30	Partial Results	4-5
4-31	Measurement Time	4-10
4-32	Step Response	4-10
4-33	Continuous Response	4-10
4-34	Overhead Time	4-10
4-36	Digital Filter	4-10
4-37	Default Filter Lengths	4-10
4-38	Settled Measurement Time	4-10
4-39	High Frequency Accuracy	4-10
4-42	Waveform Sensitivity	4-12
4-47	Chart Recorder Operation	4-12
4-49	Remote (GPIB) Operation	4-13
4-50	Introduction	4-13
4-52	Local Operation	4-13
4-53	Remote Operation	4-13
4-54	Bus Address	4-13
4-55	Terminating Characters	4-13
4-56	Listen Operation	4-13
4-57	Talk Operation	4-13
4-59	IEEE-488 Command Supported	4-13
4-60	Number Formatting	4-14
4-61	String Format	4-14
4-62	Listen Parameter Commands	4-14
4-64	Listen Action Commands	4-15
4-65	Listen Array Commands	4-15
4-67	Talk Modes	4-15
4-71	Talk Mode 0 (Talk Measurement Floating Point)	4-16
4-72	Talk Mode 1 (Talk Measurement With Units)	4-16
4-73	Talk Mode 2 (Talk Error)	4-17
4-74	Talk Mode 3 (Talk Error with Message)	4-17
4-75	Talk Mode 4 (Talk Channel Status)	4-17
4-76	Talk Mode 5 (Talk Instrument Status)	4-18
4-77	Talk Mode 6 (Talk Parameter)	4-18
4-80	Talk Mode 7 (Talk Array)	4-18
4-81	IEEE-488 Bus Only Commands	4-18
4-82	General	4-18
4-83	Talk Mode (TM) Command	4-18
4-84	SI Command	4-18
4-88	SO Command	4-19

4-92 FI Command 4-19
4-96 FO Command 4-20
4-101 DI Command 4-20
4-104 DO Command 4-20
4-107 DF Command 4-21
4-108 DN Command 4-21
4-109 SM (SRQ Mask) 4-21
4-110 Measured and Triggered Operation And Settled Reading 4-21
4-111 General 4-21
4-112 Measure Normal (MN) 4-21
4-113 Measure Filtered (MF) 4-21
4-114 Measure Settled (MS) 4-21
4-115 Trigger Normal (TN) 4-21
4-116 Trigger Filtered (TF) 4-22
4-117 Trigger Settled (TS) 4-22
4-118 IEEEE Programming Examples 4-22
4-121 Example 1 4-22
4-122 Example 2 4-22
4-123 Error Messages 4-23

SECTION V -- THEORY OF OPERATION

Paragraph Page
5-1 Introduction 5-1
5-3 Basic Block Diagram 5-1
5-10 Power Sensors 5-1
5-11 Diode Sensors 5-2
5-12 Thermal Sensors 5-2
5-13 Input Circuits 5-2
5-14 Chopper Circuits 5-2
5-15 Amplifier Circuits 5-4
5-16 Filter and A/D Conversion Circuits 5-4
5-18 D/A Conversion Circuits 5-4
5-19 Chopper Drive Circuits 5-5
5-21 Other Input Assembly Circuits 5-5
5-22 Control Assembly 5-5
5-23 General 5-5
5-24 Microprocessor Circuits 5-5
5-28 Display/Keyboard Interface Circuits 5-5
5-31 RANGEand FUNCTION Switches 5-7
5-32 Power Supply Circuits 5-7
5-34 Display/Keyboard Assembly 5-7
5-35 General 5-7
5-36 Display Circuits 5-7
5-37 Annunciators, Keys, and Analog Meter 5-7
5-38 Calibrator Assembly 5-7
5-40 GPIB Assembly (Optional) 5-7

SECTION VI -- MAINTENANCE

Paragraph Page
6-1 Introduction 6-1
6-3 Safety Requirements 6-1
6-5 Test Equipment Required 6-1
6-7 Cleaning Procedure 6-1
6-9 Removal And Replacement 6-1
6-10 Instrument Covers 6-1
6-11 Display/Keyboard Access 6-1

6-12 Other Assemblies 6-1
6-13 Inspection 6-1
6-15 Performance Tests 6-4
6-17 Troubleshooting 6-5
6-18 General 6-5
6-22 Troubleshooting Chart 6-5
6-23 Fault Isolation Procedures 6-5
6-24 Power Supply Checks 6-5
6-25 Micrprocessor Checks 6-7
6-26 Chopper Circuit Checks 6-7
6-27 Input Assembly Checks 6-8
6-28 50 MHz Calibrator Checks 6-8
6-29 Adjustment 6-9
6-31 Calibration 6-9
6-32 General 6-9
6-33 Preliminary Steps 6-9
6-34 Manual Calibration 6-11

SECTION VII -- PARTS LIST

Paragraph Page
7-1 Introduction 7-1

LIST OF TABLES

Table Page
1-1 Performance Specifications 1-3
1-2 Sensor Characteristics 1-4
1-3 Calibration Factor Uncertainty, Coaxial Sensors 1-5
1-4 Calibration Factor Uncertainty, Waveguide Sensors 1-5
1-5 Power Reference Uncertainty 1-5
1-6 Temperature Coefficient 1-5
3-1 Operating Controls, Indicators, And Controls 3-1
4-1 Listen Parameter Commands 4-14
4-2 Listen Action Commands 4-15
4-3 Listen Array Parameter Commands 4-16
4-4 Talk Array Commands 4-16
4-5 Talk Modes 4-16
4-6 Error Messages 4-17
4-7 SRQ Masks 4-21
5-1 Input Assembly Specifications 5-4
6-1 Test Equipment Required 6-1
6-2 Troubleshooting Chart 6-6
6-3 Power Supply Checks 6-7
6-4 End-of-String Selections 6-14
6-5 Upscale And Downscale Calibration Points 6-15
7-1 Manufacturer's Federal Supply Code Numbers 7-1
8-1 List of Schematics 8-1

LIST OF ILLUSRATIONS

Figure Page
1-1 Model 4220 RF Powermeter vi
1-2 Outline Dimensions 1-2
2-1 Packaging Diagram 2-1
3-1 Model 4220, Front Panel Controls, Indicators and Connectors 3-3
3-2 Model 4220, Rear Panel Controls and Connectors 3-3
4-1 14-Point Sensor Calibration 4-2
4-2 Typical High Frequency Sensor Calibration 4-2

4-3 Diode Sensor Decay 4-3
4-4 Thermal Sensor Decay 4-3
4-5 Extended Hold Range Mode 4-4
4-6 Noise Reduction 4-6
4-7 Typical Error Band Specifications 4-7
4-8 Probablility of Falling Within An Error Band 4-7
4-9 Confidence Curves, 51013 Sensor With 2.8 Second Filter 4-8
4-10 Confidence Curves, 51013 Sensor With 10 Second Filter 4-9
4-11 Integration of Power 4-10
4-12 Mismatch Uncertainties Chart 4-11
4-13 Error Due to AM Modulation (51013 Diode Sensor) 4-12
5-1 Model 4220 Block Diagram 5-1
5-2 Typical Diode Sensor 5-2
5-3 Input Circuits, Block Diagram 5-3
5-4 Control Assembly, Block Diagram 5-6
5-5 50 MHz Calibrator, Block Diagram 5-8
6-1 Model 4220, Top View With Covers Removed 6-2
6-2 Model 4220, Bottom View With Covers Removed 6-3
6-3 FUNCTION and RANGE Rotary Switch Positions 6-10
6-4 Test Switch Positions 6-13
8-1 Frame Assembly A1, Schematic Diagram 8-3
8-2 Display/Keyboard Assembly A4, Parts Location 8-4
8-3 Display/Keyboard Assembly A4, Schematic Diagram 8-5
8-4 Control Assembly A5, Parts Location 8-6
8-5 Control Assembly A5, Schematic Diagram 8-7
8-6 Input Assembly A6, Parts Location 8-8
8-7 Input Assembly A6, Schematic Diagram 8-9
8-8 Chopper Assembly A7, Parts Location 8-10
8-9 Chopper Assembly A7, Schematic Diagram 8-11
8-10 50 MHz Calibrator Assembly A8, Parts Location 8-12
8-11 50 MHz Calibrator Assembly A8, Schematic Diagram 8-13
8-12 GPIB Assembly A10, Parts Location 8-14
8-13 GPIB Assembly A10, Schematic Diagram 8-15

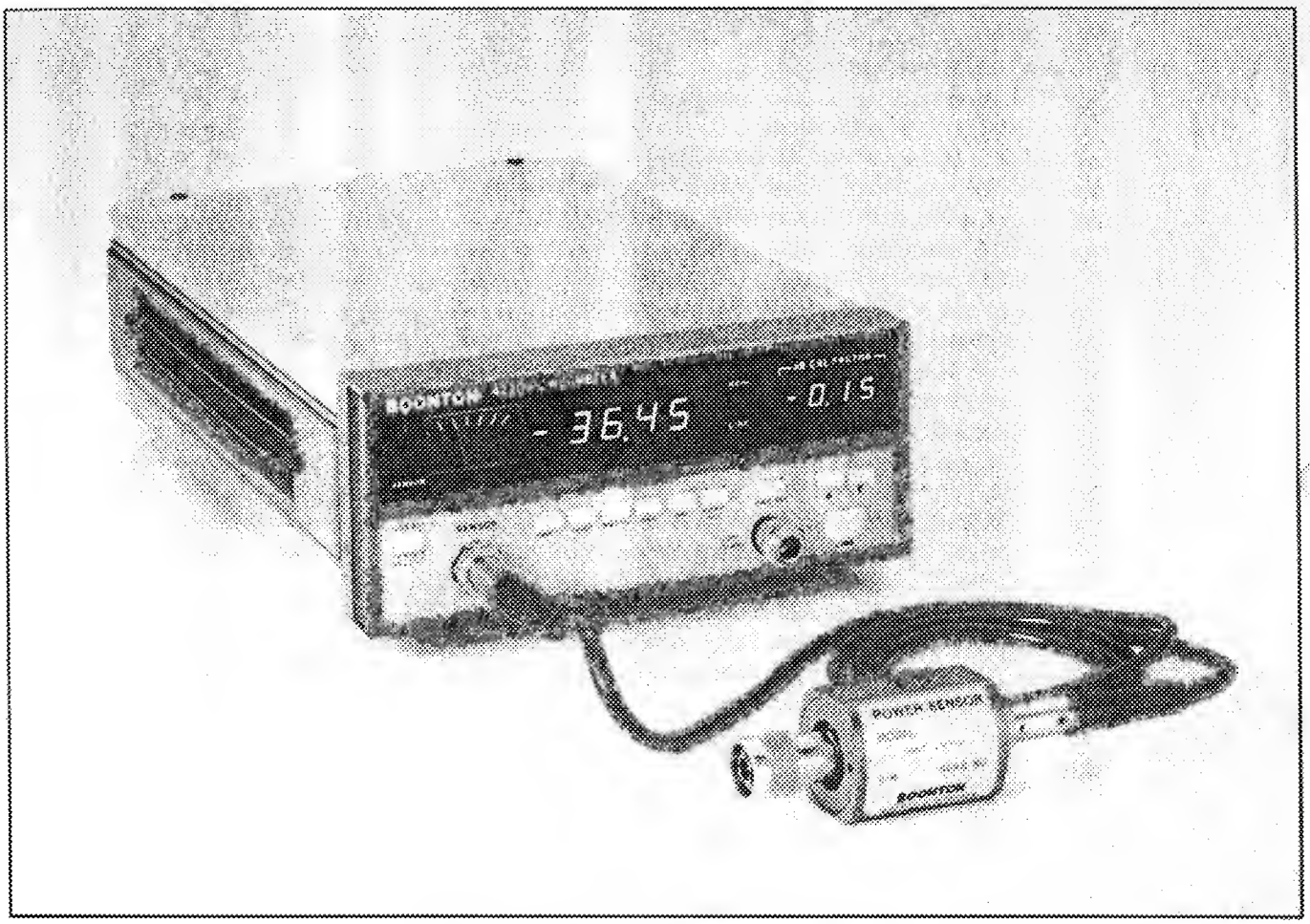

Figure 1-1. Model 4220 RF Powermeter.

SECTION I
GENERAL INFORMATION

1-1. INTRODUCTION.

1-2. This instruction manual provides general information, installation and operating instructions, application notes, theory of operation, maintenance instructions, parts lists, and schematic diagrams for the Model 4220 RF Powermeter. See Figure 1-1 and 1-2.

1-3. DESCRIPTION.

1-4. The Model 4220 is a microprocessor-based, single channel, solid state RF powermeter. It is capable of measuring RF power levels from -75 dBm to +50 dBm. The frequency range and power level are sensor dependent. Available Boonton 50000 series sensors provide measurement capabilities for frequencies from 100 kHz to 110 GHz.

1-5. FEATURES.

1-6. Power Sensors. A wide range of diode and thermocouple power sensors for both coaxial and waveguide applications is available for use with the Model 4220. Power sensors are not supplied as part of the Model 4220, but must be ordered separately.

1-7. Diode sensors measure the voltage across a precision resistor, using specially selected diodes. Detection is square law (true RMS) over approximately the lower two-thirds of the sensor dynamic range, and peak detecting over the upper portion. Because the instrument is calibrated for sine waves over the entire range, measurements at the top one-third of the sensor dynamic range are valid only for non-modulated signals. In the RMS region, linearity is excellent, and any signal type can be measured. The diode range has been extended into the peak detecting region with the use of real time shaping for the diode curve. When coupled with the high sensitivity of the diode, such shaping allows an unprecedented dynamic range of 80 dB or more. Diode sensors are rugged and have an overload headroom of more than 5 dB for continuous signals. The dynamic range in the RMS region can be extended further through use of an external attenuator.

1-8. Thermal sensors measure the voltage developed across a dissimilar metal junction caused by the thermal gradient generated by the RF power being measured. Because these sensors are heat detecting, they provide true RMS response over their entire range. Very high peak power (15 to 30 watts) can be accommodated for very short duty cycles and still provide valid results. The dynamic range is 50 dB. Thermal sensors are not as sensitive as diode sensors.

1-9. Calibration data for up to four sensors can be stored in non-volatile RAM. Linearity and high frequency sensor calibration correction data, which are supplied with each sensor, can be entered. For sensors ordered with the Model 4220, the calibration data is entered prior to shipment. When the frequency of the RF signal to be measured by one of these sensors is entered, the instrument looks up the appropriate high frequency calibration factors (cal factors), interpolates as necessary, and applies the correction to the measured value automatically. Sensors for which cal factors are not stored in RAM can also be used with the instrument. Cal factors for such sensors can be read off the calibration sheet supplied with the sensor and entered manually through the front panel controls. Cal factors entered in this manner will be used by the instrument to correct subsequent readings, but will not be stored in non-volatile RAM. Cal factors for sensors ordered with the instrument are stored in a plastic pouch attached to the inside top cover.

1-10. Simple Instrument Setup and Operation. In the operating mode the functions ZERO, WATTS, dBm, dBr, LOAD REF, and PWR REF are selected with a single keystroke. In the shifted mode, GPIB address, filter, frequency, range, set reference, and sensor calibration setup parameters may be accessed. Values for these parameters are displayed and can be adjusted simply by using up/down keys.

1-11. Alphanumeric Displays. Two alphanumeric LED displays provide clear, unambiguous readouts of instrument setup and measurement values. In the shifted mode, selected setup functions are shown on one of the displays and the numerical value for that function is shown on the other. In the operating mode, the measured value is shown on one of the displays, and the dB calibration factor applied to the measurement is shown on the other. Annunciators associated with the main data display indicate the unit applicable to the displayed measurement value, thereby minimizing the possibility of reading misinterpretation.

1-12. Selectable Ranging. Any of seven measurement ranges, or autoranging, can be selected during instrument setup. The selection will be held until it is changed, or until the instrument is off. When measuring signals with levels that fall within a narrow range, selecting one specific instrument range may reduce measurement time. Autoranging is useful if the RF signal level is unknown, or if RF signals with widely varying levels are to be measured.

1-13. Selectable Filtering. Measurement speed and display stability can be optimized through the use of selectable filtering. Filter times can be adjusted up to 20 seconds maximum in 50 millisecond increments.

1-14. Zeroing. Automatic zeroing (nulling of offsets for the sensor and input channel) is done independently on each range to eliminate zero carryovers.

1-15. Built-In Precision Calibrator. A built-in 50 MHz calibrator provides an accurate, stable, and convenient power source for calibration of the instrument to specified tolerances. The calibrator may be toggled on or off using the front panel PWR REF key.

1-16. Analog Display. A front panel meter provides an analog display of measured values. This feature is especially useful for nulling and peaking applications.

1-17. Chart Recorder Output. A 0 to 10 volt dc output, proportional to the measurement values, is available for application to a chart recorder.

1-18. GPIB (Optional). An IEEE-488 option enables full service remote control of the Model 4220. All instrument controls and values, except power on and off, are accessible to a bus controller in the remote operating mode.

1-19. ACCESSORIES.

1-20. The AC power cord is supplied with the instrument. One or more Boonton 50000 series power sensors are required. The power sensors are not supplied as part of the instrument, but must be ordered separately. A five-foot power sensor cable, Model 41-2A, is supplied with each sensor ordered. Additional available accessories include the following:

a. Model 41-2A/10 Sensor/Probe Interconnecting Cable (10 ft)

b. Model 41-2A/20 Sensor/Probe Interconnecting Cable (20 ft)

c. Model 41-2A/50 Sensor/Probe Interconnecting Cable (50 ft)

d. Model 41-2A/100 Sensor/Probe Interconnecting Cable (100 ft)

e. Model 950047 F/F Adapter, 41-2A (for connecting Model 41-2A cables end to end)

f. Model 950049 Bulkhead Connector F/F, 41-2A (for connecting Model 41-2A cables end to end)

g. Model 954015 Rack Mounting Kit

1-21. OPTIONS.

1-22. An IEEE-488 bus option is available for remote operation of the instrument in ATE applications. SH1, AH1, T6, L4, SR1, RL1, DC1, and DT1 are all implemented.

1-23. SPECIFICATIONS.

1-24. Performance specifications of the Model 4220 are listed in Table 1-1.

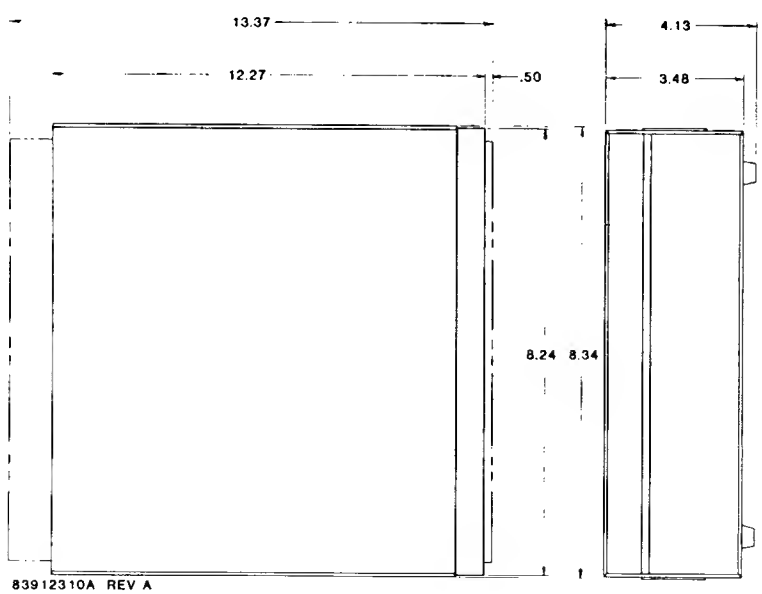

Figure 1-2. Outline Dimensions.

TABLE 1-1. PERFORMANCE SPECIFICATIONS

Parameter	Specification
Frequency Range	100 kHz to 110 GHz, sensor dependent
Power Range	-70 dBm to +33 dBm, sensor dependent
Power Sensors	Compatible with all Boonton diode and thermal sensors (refer to Table 1-2)
Dynamic Range	Up to 80 dB with diode sensors; up to 50 dB with thermal sensor
Inputs	Front panel SENSOR connector; rear panel IEEE-488 connector optional
Outputs	Front panel PWR REF connector, 50 MHz, 0 dBm; rear panel recorder BNC connector, 9.09 kilohm impedance, 0 to 10 volts into 1 megohm (may be operated into 1 kilohm for 1V fs)
Displays:	
Main data	4-1/2 digit LED
dB CAL FACTOR	4 digit LED
Analog	Meter, reading proportional to main data display
Display Units	W, mW, µW, nW, dBm, dBr
Display Resolution	0.01 dB or 4-1/2 digits
Ranging	Manual (7 ranges) or autoranging
Filtering	Filter times to 20.00 seconds in 0.05 second increments
Zeroing	Automatic function; calculates, stores, and applies zero corrections to each range
High Frequency Cal Factors:	+3 dB to -3 dB in 0.01 dB steps; cal factors for up to four power sensors with up to 36 frequencies each may be stored in non-volatile memory
Reference Level	-99.99 dB to +99.99 dB in 0.01 dB steps for dBr measurements
Power Reference:	
Frequency	50 MHz ± 1.5%
Output Level	0 dBm
Level Accuracy	±0.7% (±0.03 dB) (23 degrees C) for 90 days; ±0.9% (±0.04 dB) RSS, ±1.2% (±0.05 dB) worst case (0 to 55 degrees C) for 1 year
Source Impedance	50 ±1 ohm
VSWR	< 1.02
Harmonic Output	< -60 dBc
Measurement Accuracy	Sum of following uncertainties (errors are ± worst case): instrument uncertainty, noise/signal percentage, power reference uncertainty, sensor shaping, temperature drift, and high frequency calibration factors
Instrument Uncercertainty	±0.47% (±0.02 dB) at full scale; ±0.69% (±0.03 dB) at 1/10 full scale
Noise/signal Percentage	Convert noise listed in Table 1-2 to percent of full scale
Power Reference Uncertainty	Refer to Table 1-5
Sensor Shaping	±1.0% (±0.04 dB)
Temperature Drift	Refer to Table 1-6
High Frequency Calibration Factors	Refer to Table 1-3 or 1-4, as applicable
Power Requirements	100, 120, 220, or 240 VAC, 50-60 Hz or 400 Hz, 40 VA maximum
Operating Temperature	0 to 55 degrees C
Weight	6.6 lb (0.66 kg)
Dimensions	3.5 in. H, 8.25 in. W, 13.25 in. D (8.9 X 21.0 X 33.7 cm)

TABLE 1-2. SENSOR CHARACTERISTICS

Model (Impedance) (RF Connector)	Freq. Range	PWR range (Watts) (dBm)	Overload Rating (Watts) (dBm)	Max. SWR Frequency	Max. SWR SWR	Drift and Noise Lowest Range: Drift (typical) 1 Hr**	Noise (typical) RMS	Noise (typical) 2σ
DIODE SENSORS								
51011 (4B) 50Ω N(M)	100 kHz to 12.4 GHz	1.0 nW to +100 mW −60 to +20 dBm	300 mW +25 dBm	100 kHz to 2 GHz 2 GHz to 4 GHz 4 GHz to 11 GHz 11 GHz to 12.4 GHz	1.12 1.2 1.4 1.6	150 pW	65 pW	130 pW
51012 (4C) 75Ω N(M)	100 kHz to 1 GHz	1.0 nW to +100 mW −60 to +20 dBm	300 mW +25 dBm	100 kHz to 1 GHz	1.18	150 pW	65 pW	130 pW
51013 (4E) 50Ω N(M)	100 kHz to 18 GHz	1.0 nW to 10 mW −60 to +20 dBm	300 mW +25 dBm	100 kHz to 4 GHz 4 GHz to 10 GHz 10 GHz to 18 GHz	1.3 1.5 1.7	150 pW	65 pW	130 pW
51051 (4G) 50Ω APC 3.5 (M)	1 MHz to 26.5 GHz	0.1 nW to 10 mW −70 to +10 dBm	300 mW +25 dBm	1 MHz to 12.4 GHz 12.8 GHz to 18 GHz 18 GHz to 26.5 GHz	1.28 1.37 1.92	100 pW	30 pW	60 pW
51015 (5E) 50Ω N(M)	100 kHz to 18 GHz	10 nW to 1 W −50 to +30 dBm	2 W +33 dBm	100 kHz to 1 GHz 1 GHz to 2 GHz 2 GHz to 4 GHz 4 GHz to 12.4 GHz 12.4 GHz to 18 GHz	1.07 1.10 1.12 1.18 1.28	1.5 nW	.65 nW	1.3 nW
51033 (6E) 50Ω N(M)	100 kHz to 18 GHz	100 nW to 2 W −40 to +33 dBm	2 W +33 dBm	100 kHz to 1 GHz 1 GHz to 2 GHz 2 GHz to 4 GHz 4 GHz to 12.4 GHz 12.4 GHz to 18 GHz	1.07 1.10 1.12 1.18 1.28	15 nW	6.5 nW	13 nW
THERMOCOUPLE SENSOR								
51100 (9E) 50Ω N(M)	10 MHz to 18 GHz	1.0 μW to 100 mW −30 to +20 dBm	300 mW +25 dBm*	10 MHz to 15 MHz 15 MHz to 10 GHz 10 GHz to 18 GHz	1.5 1.35 1.6	200 nW	100 nW	200 nW
* Thermocouple Pulse Characteristics at 25°C: Maximum pulse energy = 30 W-μsec. (per pulse) Maximum pulse power = 15 W Peak.								
WAVEGUIDE SENSORS								
51035 (4K) WR-42 UG-595/U	18 GHz to 26.5 GHz	10 nW to 10 mW −50 to +10 dBm	100 mW +20 dBm	18 GHz to 26.5 GHz	1.3	200 pW	60 pW	120 pW
51036 (4KA) WR-28 UG-599/U	26.5 GHz to 40 GHz	10 nW to 10 mW −50 to +10 dBm	100 mW +20 dBm	26.5 GHz to 40 GHz	1.3	60 pW	15 pW	30 pW
51037 (4Q) WR-22 UG-383/U	33 GHz to 50 GHz	10 nW to 10 mW −50 to +10 dBm	100 mW +20 dBm	33 GHz to 50 GHz	1.3	60 pW	15 pW	30 pW
51045 (4U) WR-19 UG-383/U	40 GHz to 60 GHz	10 nW to 10 mW −50 to +10 dBm	100 mW +20 dBm	40 GHz to 60 GHz	1.3	60 pW	15 pW	30 pW
51046 (4V) WR-15 UG-385/U	50 GHz to 75 GHz	10 nW to 10 mW −50 to +10 dBm	100 mW +20 dBm	50 GHz to 75 GHz	1.3	60 pW	15 pW	30 pW
51047 (4W) WR-10 UG-387/U	75 GHz to 110 GHz	32 nW to 10 mW −45 to +10 dBm	100 mW +20 dBm	75 GHz to 110 GHz	1.3	60 pW	15 pW	30 pW
51972-WRD WRD180C24	18 GHz to 40 GHz	10 nW to 10 mW −50 to +10 dBm	100 mW +20 dBm	18 GHz to 40 GHz	1.3	200 pW	60 pW	120 pW

NOTES: * Will withstand short periods of overload, extended overload operation may result in permanent change in characteristics or burnout.
** After 2 hour warmup.

High frequency power linearity uncertainty: (worst case) 4B, 4C, 4E (.005 × f) dB per dB above +4 dBm; (above +14 dBm for the 5E and above +24 dBm for the 6E), where f is in GHz.

Power Linearity Uncertainty At 50 MHz:
<10 dBm: 1% for 4B, 4C, 4E, 5E, 6E, 9E, and all waveguide sensors, 2% for 4G sensor.
10-20 dBm: 1% for 5E and 6E sensors; 3% for 4B, 4C, and 4E sensors. 20-33 dBm: 3% for 5E and 6E sensors.

TABLE 1-3. CALIBRATION FACTOR UNCERTAINTY, COAXIAL SENSORS

Model	Frequency GHz																			
	.03-.05*	< 2	2	3	4	5	6	7	8	9	10	11	12	13	14	15	16	17	18	19-26.5
4B (51011)																				
Max. %	0	1.3	3.0	3.0	3.5	3.5	3.5	3.5	4.0	4.0	4.0	4.5	4.5							
RSS %	0	1.3	1.7	1.7	1.7	1.8	1.9	2.0	2.1	2.5	2.5	2.4	3.0							
4C (51012)																				
Max. %	0	1.3																		
RSS %	0	1.3																		
4E (51013)																				
Max. %	0	1.3	3.0	3.0	3.5	3.5	3.5	3.5	4.0	4.0	4.0	4.5	4.5	6.0	6.0	6.0	6.0	6.0	6.0	
RSS %	0	1.3	1.8	1.8	1.8	1.9	2.0	2.0	2.2	2.6	2.5	2.7	3.0	3.4	3.1	3.2	3.3	3.1	3.4	
4G (51051)																				
Max. %	0	1.3	3.0	3.0	3.5	3.5	3.5	3.5	4.0	4.0	4.0	4.0	4.5	6.0	6.0	6.0	6.0	6.0	6.0	6.0
RSS %	0	1.3	1.7	1.7	1.7	1.7	1.8	1.9	2.0	2.4	2.3	2.2	2.6	3.0	2.8	2.8	2.9	2.8	3.1	3.4
5E (51015)																				
Max. %	0	1.3	3.0	3.0	3.5	3.5	3.5	3.5	4.0	4.0	4.0	4.0	4.5	6.0	6.0	6.0	6.0	6.0	6.0	
RSS %	0	1.3	1.7	1.7	1.7	1.7	1.8	1.9	2.0	2.4	2.3	2.2	2.8	3.0	2.8	2.8	2.9	2.8	3.1	
6E (51033)																				
Max. %	0	1.3	3.0	3.0	3.5	3.5	3.5	3.5	4.0	4.0	4.0	4.0	4.5	6.0	6.0	6.0	6.0	6.0	6.0	
RSS %	0	1.3	1.7	1.7	1.7	1.7	1.8	1.9	2.0	2.4	2.3	2.2	2.8	3.0	2.8	2.8	2.9	2.8	3.1	
9E (51100)																				
Max. %	0	1.3	3.0	3.0	3.5	3.5	3.5	3.5	4.0	4.0	4.0	4.0	4.5	6.0	6.0	6.0	6.0	6.0	6.0	
RSS %	0	1.3	1.8	1.8	1.8	1.8	1.9	2.0	2.1	2.5	2.4	2.6	2.9	3.3	3.1	3.1	3.2	3.0	3.4	

* Reference Frequency = 50 MHz. Note: CAL Factors are supplied at every 1 GHz.

TABLE 1-4 CALIBRATION FACTOR UNCERTAINTY, WAVEGUIDE SENSORS

Model	Ref. GHz	At Ref. Freq.	Over Sensor BW	Sensor	Ref. GHz	At Ref. Freq.	Over Sensor BW	Sensor	Ref. GHz	At Ref. Freq.	Over Sensor BW	Sensor	Ref. GHz	At Ref. Freq.	Over Sensor BW
4K (51035)	22			4Q (51037)	40			4V (51046)	60						
Max. %		6	6	Max. %		10	13	Max. %		12	13	WRD-180 (51972)	33		
RSS %		5	5	RSS %		6	7	RSS %		6	9				
4KA (51036)	33			4U (51045)	40			4W (51047)	94						
Max. %		6	10	Max. %		10	13	Max. %		12	13	Max. %		6	10
RSS %		5	7	RSS %		6	8	RSS %		9	11	RSS %		5	7

Note: For waveguide sensors, the reference calibration is at −20 dBm. For levels other than −20 dBm there is an additional uncertainty of 0.01 dB per dB relative to −20 dBm.

TABLE 1-5. POWER REFERENCE UNCERTAINTY

Model	Uncertainty
All coaxial sensors	±0.7% (±0.03 dB) at 0 dBm for 90 days
51035	0.25 dB + 0.01 dB per dB relative to -20 dBm
51036, 51037, 51045, 51046, and 51047	0.50 dB + 0.01 dB per dB relative to -20 dBm

TABLE 1-6. TEMPERATURE COEFFICIENT

Model	Temperature Coefficient
51013, 51015, and 51033	0.015 dB per degree C from 18 to 28 degrees relative to 23 degrees C
51051	0.05 dB per degree C from 18 to 28 degrees relative to 23 degrees C

SECTION II
INSTALLATION

2-1. INTRODUCTION.

2-2. This section contains unpacking, mounting, power requirements, connections, and preliminary checkout instructions for the Model 4220.

2-3. UNPACKING.

2-4. The Model 4220 is shipped complete and is ready for use upon receipt. Packaging details are shown in Figure 2-1. Unpack the instrument from the shipping container and inspect it for damage that may have occurred during shipment.

NOTE

Save the packing material and container for possible use in shipment of the instrument.

2-5. MOUNTING.

2-6. For bench-top use, choose a clear, uncluttered area. A pull down bail is at the bottom of the instrument for use as needed. For rack mounting, an accessory kit is available. The required hardware and instructions are supplied with the accessory kit.

2-7. POWER REQUIREMENTS.

2-8. The Model 4220 has a tapped power transformer and two line switches that permit operation from 100, 120, 220, or 240 volt, 50 to 60 Hz or 400 Hz, single-phase, AC power sources. (For operation using a 400 Hz power source, the trace between terminals E2 and E3 on input board A6 must be cut and a jumper must be connected between terminals E1 and E3 to establish a phase lock reference.) Power consumption is 40 VA maximum. An AC power cord is supplied with the instrument. Connect the power cord to the power receptacle on the rear panel of the instrument.

CAUTION

Before connecting the instrument to the power source, always make certain that the line voltage switches on the rear panel are set to the positions corresponding to the voltage of the AC power source, and that a slo-blow fuse of the correct rating (0.3 ampere for 100 or 120 volts, 0.15 ampere for 220 or 240 volts) is installed in the fuse holder.

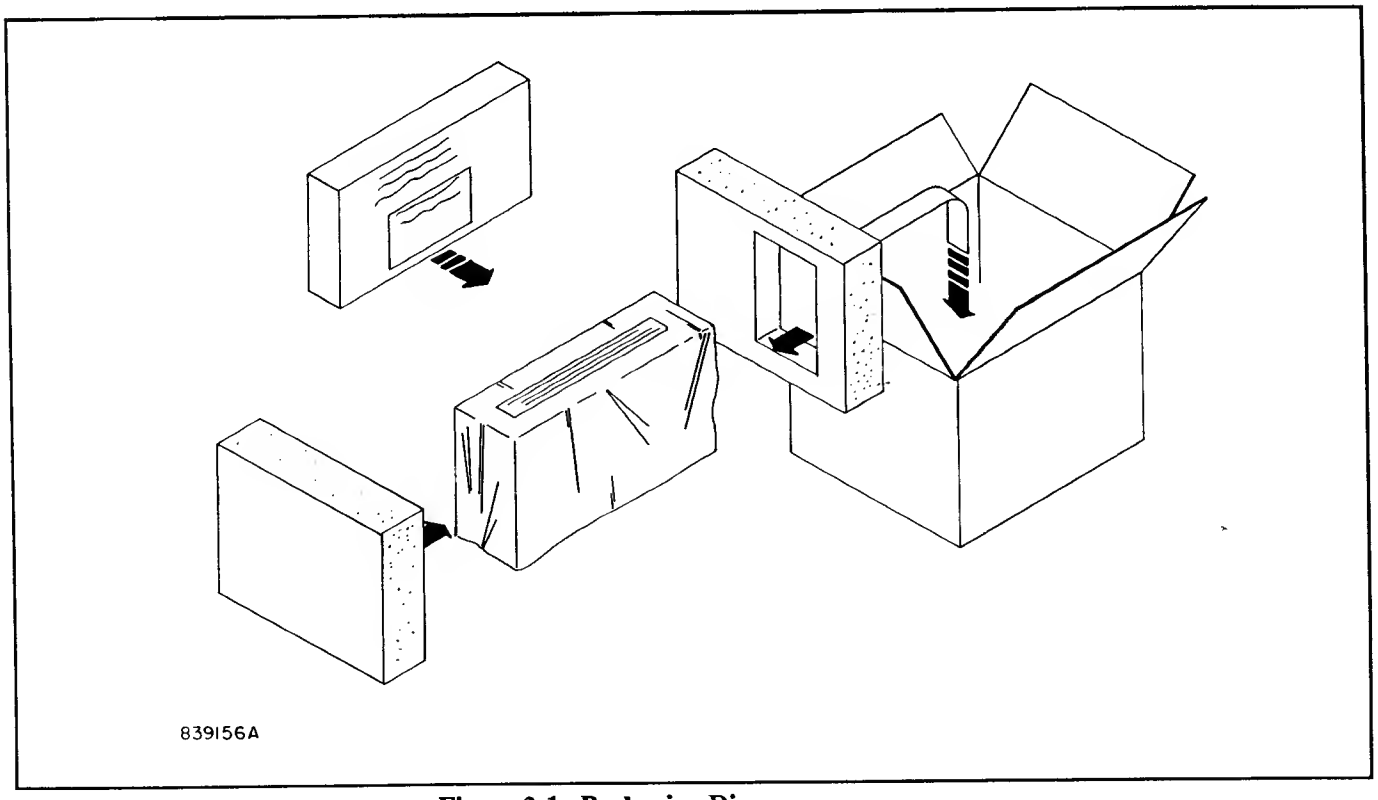

Figure 2-1. Packaging Diagram

2-9. CONNECTIONS.

2-10. Sensor. Connect the sensor that is to be used for the measurement to the front panel SENSOR connector using the cable supplied with the sensor or an accessory sensor/probe interconnecting cable.

2-11. Recorder. If a recorder is to be used to record measurement data, connect the recorder to the recorder BNC connector on the rear panel. Output impedance is 9.09 kilohms, and the output voltage range is 0 to 10 volts dc.

2-12. GPIB. If the instrument is equipped with the IEEE-488 option and it is to be operated remotely over the bus, connect the instrument to the bus via the rear panel IEEE-488 connector. The connector provides IEEE-488 standard interface.

2-13. PRELIMINARY CHECK.

2-14. The following preliminary check verifies that the Model 4220 is operational. It should be performed before the instrument is placed into use. To perform the preliminary check, proceed as follows:

a. Connect the AC power cord to the power receptacle at the rear of the instrument and to a suitable AC power source.

b. Set the front panel LINE switch to the ON position. The LINE annunciator should light, and the instrument should perform an initialization routine. During this routine, verify that the following events occur in the order given:

(1) All front panel display segments and all annunciators should be illuminated.

(2) "BEC" should be shown in the left display, and the number of the current software version should be shown in the right display.

(3) The nW, CAL, LINE, and SENSOR 1 annunciators should remain lighted.

(4) The main data display and the dB CAL FACTOR display should indicate some numerical values.

c. Using the SENSOR SELECT key, verify that the SENSOR 1, 2, 3, and 4 annunciators light in sequence. (If calibration data for sensors has been stored in non-volatile RAM, the sensor serial number and model should also be displayed during sensor selection.)

d. Press the ENTER/SHIFT key. Verify that four dashes are shown on the main data display, "SHFt" is shown on the dB CAL FACTOR display, and all annunciators except the LINE annunciator are off.

e. Press the FILTER/WATTS key. Verify that "FIL" is shown on the dB CAL FACTOR display, and the main data display can be incremented and decremented using the up/down keys.

f. Press the FREQ/dBm key. Verify that "FrE" is shown on the db CAL FACTOR display, and the main data display can be incremented and decremented using the up/down keys.

g. Press the RANGE/dBr key. Verify that "rg" is shown on the dB CAL FACTOR display, and the main data display can be incremented and decremented using the up/down keys.

h. Press the SET/LOAD REF key. Verify that "SEt" is shown on the dB CAL FACTOR display, and the main data display can be incremented and decremented using the up/down keys.

i. Press the CAL/PWR REF key. Verify that "rEF" is shown on the main data display, and "CAL" is shown on the dB CAL FACTOR display.

j. Press the RANGE/dBr key, then press the ENTER/SHIFT key. Verify that the CAL, LINE, nW, and SENSOR 1 annunciators are lighted, and some numerical value is displayed on each of the two displays.

k. Connect a sensor to the front panel SENSOR connector.

l. Press the ADRS/ZERO key. Verify that a series of brackets and dashes is shown on each of the two displays while the instrument performs the zeroing routine, and numerical values are displayed on both displays when zeroing has been completed.

m. Press the FREQ/dBm key and verify that the dBm annunciator lights.

n. Press the FILTER/WATTS key and verify that one of the power annunciators lights.

o. Press the RANGE/dBr key and verify that the dBr annunciator lights.

p. Press the FREQ/dBm key.

q. Connect the sensor to the 0 dBm 50 MHz connector on the front panel of the instrument.

r. Verify that the CAL annunciator is lit. If it is not, press the CAL/PWR REF key to actuate the calibrator.

s. Press the ENTER/SHIFT key, then the CAL/PWR REF key, and then the ENTER/SHIFT key again. The instrument should perform a calibration routine. At the completion of this routine, verify that the main data display shows 0.00 dBm.

t. Press the FILTER/WATTS key and verify that the main data display shows approximately 1000 uW.

u. Using a digital multimeter, verify that the voltage at the rear panel recorder connector is 10 volts dc.

v. Press the SET/LOAD REF key and verify that the main data display reading is approximately zero, the dBr annunciator lights, and the analog meter is centered.

w. Using a digital multimeter, verify that the voltage at the rear panel recorder connector is 8.0 volts dc.

x. Disconnect the sensor from the 0 dBm 50 MHz connector.

y. Verify that the dB CAL FACTOR display can be incremented and decremented using the up/down keys.

z. If the specified results have been obtained in each of the preceding steps, the instrument can be placed into service.

SECTION III
OPERATION

3-1. INTRODUCTION.

3-2. This section contains operating instructions for the Model 4220. It is strongly recommended that the operator become familiar with all the material in this section and with the application notes in Section IV before attempting to operate the instrument; otherwise, the full capabilities of the instrument may not be realized.

3-3. OPERATING CONTROLS, INDICATORS, AND CONNECTORS.

3-4. See Figures 3-1 and 3-2 for the location of the operating controls, indicators, and connectors. Refer to Table 3-1 for the function of each of these items. Note that most of the keys on the front panel have two designations, one in blue and the other in black. These keys perform different functions in the shifted mode (blue) and the normal operating mode (black). Switching from the operating mode to the shifted mode occurs when the ENTER/SHIFT key is pressed. The shifted mode is used to set up the instrument parameters for the measurements to be made. Instrument parameters may be viewed in the shifted mode without altering their values. When the ENTER/SHIFT key is pressed again, the currently displayed parameter value is entered, and the instrument is returned to the operating mode.

NOTE

The instrument will display "Err" and an error code when operating conditions are violated. (Refer to Table 4-6 for error codes.) In the operating mode, errors are cleared by pressing the WATTS, dBm, dBr keys. In the shifted mode, errors are cleared by pressing the ENTER key, which returns the instrument to the operating mode.

3-5. OPERATING THE INSTRUMENT.

3-6. Energize the instrument by setting the LINE switch to the ON position. The LINE annunciator will light, and the

TABLE 3-1. OPERATING CONTROLS, INDICATORS, AND CONNECTORS

Index and Fig. No.	Nomenclature	Function
1, 3-1	(LOCAL)/SENSOR SELECT key	If the instrument is operating in the remote bus mode (option), pressing this key restores local control; in the local mode, this key selects one of four sensors for which calibration data is stored in the instrument. Pressing this key selects the next sensor number and, as long as the key is held, displays the sensor serial number and sensor model.
2, 3-1	SENSOR annunciators	Display the number of the sensor (1 through 4) selected by the SENSOR SELECT key.
3, 3-1	Analog meter	Provides an analog display of the measured power level for nulling or peaking applications.
4, 3-1	Main data display	4-1/2 digit LED display: in the operating mode, displays measured values; in the shifted mode, displays numerical values of selected parameters.
5, 3-1	Main display annunciators	Lighted measurement unit annunciators indicate the unit of measurement; CAL annunciator indicates that the 50 MHz calibrator is on; LINE annunciator indicates that instrument power is turned on.
6, 3-1	Bus annunciators	On instruments equipped with the IEEE-488 option, indicate bus activity.
7, 3-1	dB CAL FACTOR	4 digit LED display: in the operating mode, displays the sensor calibration factor being applied to measured values; in the shifted mode, shows the parameter selected for observation or adjustment.

TABLE 3-1. OPERATING CONTROLS, INDICATORS, AND CONNECTORS (Cont.)

Index and Fig. No.	Nomenclature	Function
8, 3-1	Up/down keys	Provide means for adjustment of selected parameter values in the shifted mode, and the sensor calibration factor in the operating mode.
9, 3-1	LINE switch	Turns the instrument on and off.
10, 3-1	CAL/PWR REF key	In the shifted mode, initiates an internal calibration routine; in the operating mode, toggles the 50 MHz calibrator on and off.
11, 3-1	0 dBm 50 MHz connector	Provides a 50 MHz, 0 dBm output for instrument calibration when the CAL annunciator is lighted. When off, connector can be used to zero the instrument.
12, 3-1	SET/LOAD REF key	In the shifted mode, selects the reference level for dBr measurements as the parameter to be displayed and/or adjusted; in the operating mode, loads the current measurement value (in dBm) as the reference level for dBr measurements.
13, 3-1	RANGE/dBr	In the shifted mode, selects the instrument measurement range for display and/or adjustment; in the operating mode, selects dBr as the unit of measurement.
14, 3-1	FREQ/dBm key	In the shifted mode, selects the frequency of the measurement signal as the parameter to be displayed and/or adjusted; in the operating mode, selects dBm as the unit of measurement.
15, 3-1	FILTER/WATTS key	In the shifted mode, selects the filter time, in seconds, as the parameter to be displayed and/or adjusted; in the operating mode, selects W, mW, uW, or nW as the unit of measurement (determined by instrument ranging)
16, 3-1	ADRS/ZERO key	In the shifted mode, selects the IEEE-488 (GPIB) address as the parameter to be displayed and/or adjusted; in the operating mode, initiates the instrument zeroing routine.
17, 3-1	ENTER/SHIFT key	In the shifted mode, enters the displayed value of the selected parameter into the instrument and returns the instrument to the operating mode; in the operating mode, switches the instrument to the shifted mode.
18, 3-1	SENSOR connector	Provides means for connecting the power sensor to the instrument.
1, 3-2	Power receptacle	Provides means for connecting the AC power cord to the instrument.
2, 3-2	Fuse	Protects the power circuits against overload.
3, 3-2	Voltage selector switches	Switch the power circuits of the instrument to accommodate 100, 120, 220, or 240 volt AC power sources.
4, 3-2	GPIB connector (option)	Provides means for connecting the instrument to the IEEE-488 bus for remote operation.
5, 3-2	Recorder connector	Provides a DC voltage proportional to the measured values for use by an external recorder.

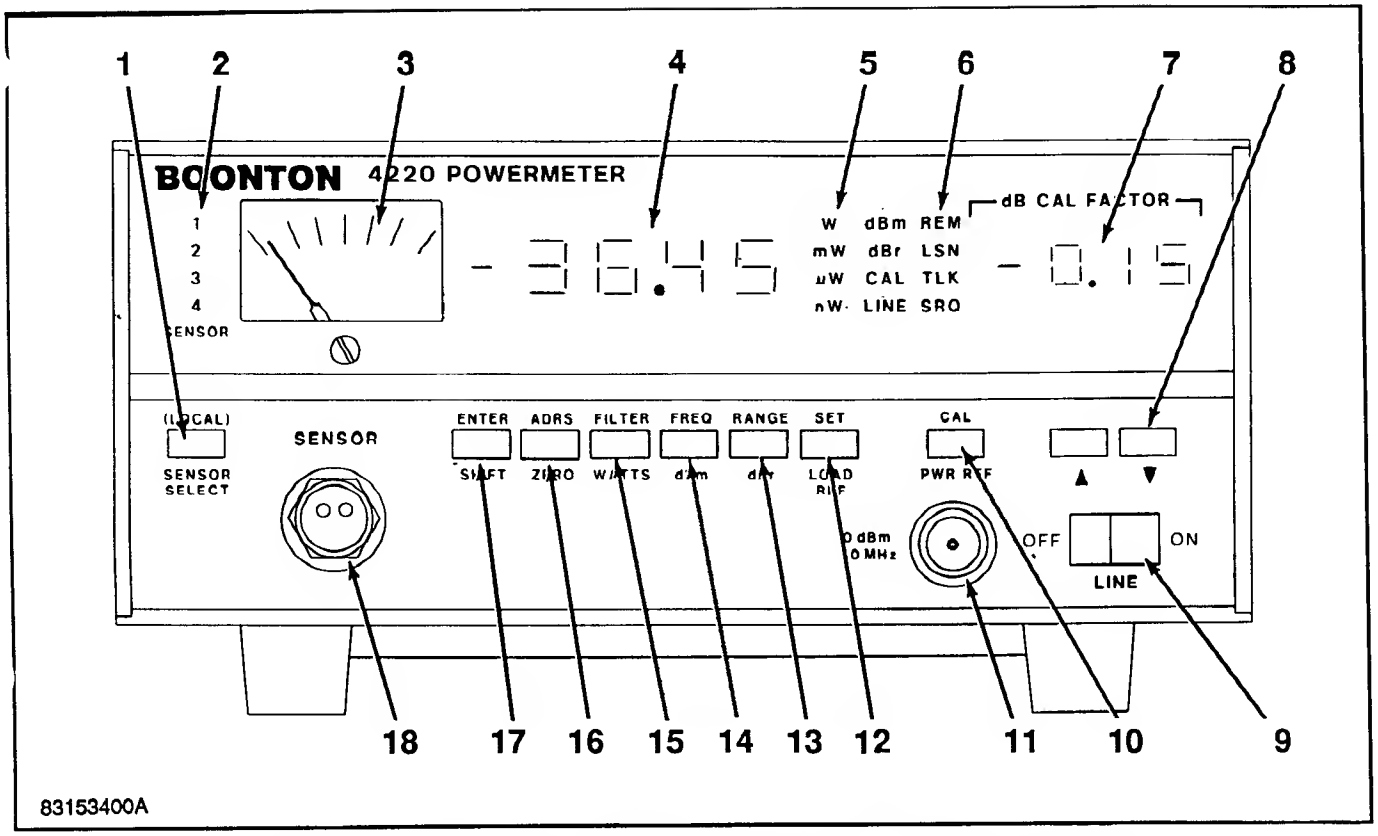

Figure 3-1. Model 4220, Front Panel Controls, Indicators, and Connectors.

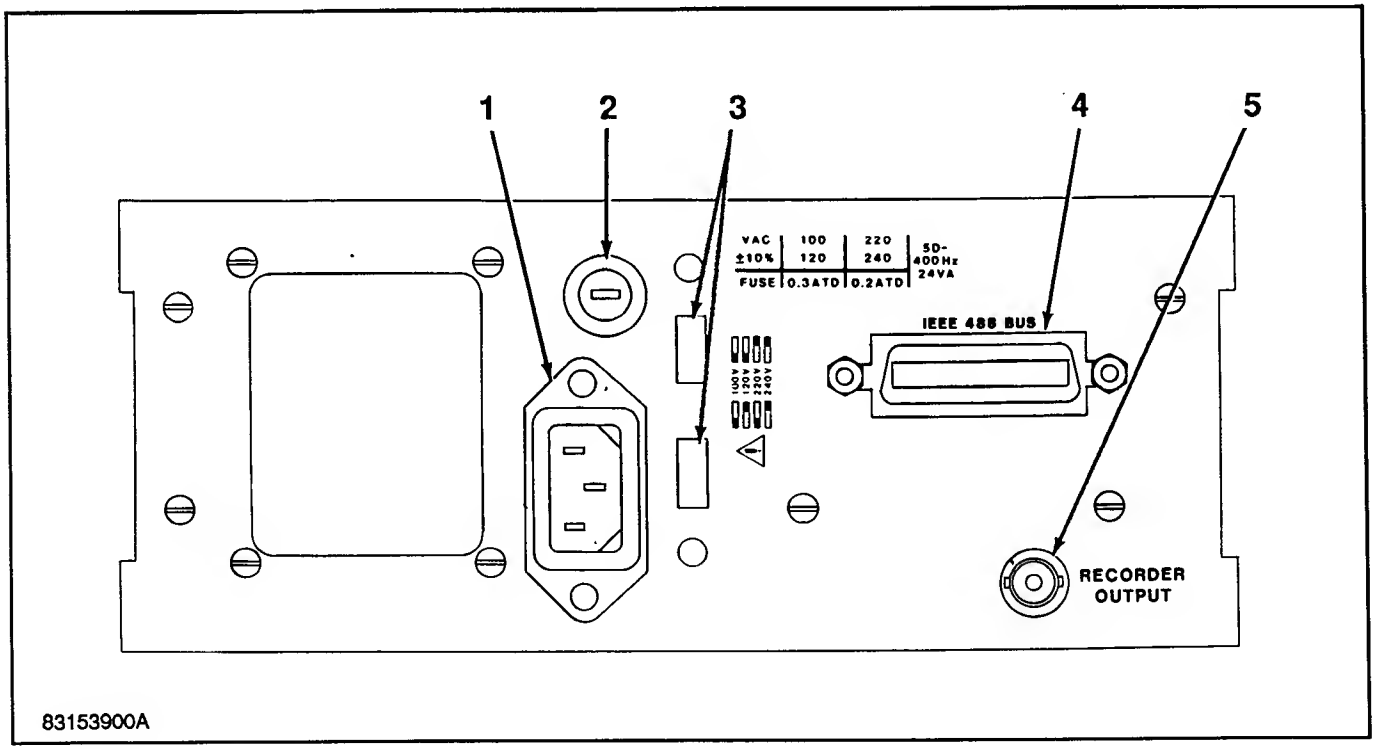

Figure 3-2. Model 4220, Rear Panel Controls and Connectors.

instrument will perform a short initialization routine, as described in paragraph 2-14. Operating parameters are set to default values, as described in paragraph 3-26.

3-7. SENSOR CONNECTION.

3-8. Select a sensor that covers the appropriate frequency and power ranges for the signal to be measured. Connect the sensor to the SENSOR connector using the five-foot cable supplied with the sensor, or with an accessory interconnecting cable.

3-9. MEASUREMENT PARAMETER SELECTION.

3-10. Sensor Selection. Calibration data for up to four sensors and up to 36 frequencies can be stored in non-volatile RAM in the instrument. If sensors are ordered with the instrument, the calibration data is entered into the instrument prior to shipment. Any calibrated sensor number can be selected using the (LOCAL)/SENSOR SELECT key. Pressing and holding the (LOCAL)/SENSOR SELECT key causes the sensor serial number and model to be displayed. With the instrument in the operating mode, toggle the displays using the (LOCAL)/SENSOR SELECT key until the desired serial number and model number of the sensor is displayed. Sensor calibration data must be present in the instrument before using a sensor. (Refer to paragraph 6-31.)

3-11. Range Selection. Any of seven measurement ranges, or autoranging, may be selected. If repetitive measurements are to be made over a narrow range of levels, selecting the appropriate instrument range may speed measurements. If measurements are to be made where the levels are unknown or vary widely, select the AUTO range. To select a range or autorange, proceed as follows:

a. Select the shifted mode by pressing the ENTER/SHIFT key.

b. Press the RANGE/dBr key. The dB CAL FACTOR display will show "rg" and the current instrument range. The main data display will show "AUTO" if in autoranging or the instrument range when the range is set.

c. If the displayed range is not the range to be used for the measurement, use the up/down keys to step through the ranges until the desired range is displayed. Nominal signal levels versus range are listed for each sensor in Table 6-5. Actual ranging points will vary according to sensor efficiency.

d. Press the ENTER/SHIFT key.

3-12. Frequency Selection. The frequency of the signal being measured must be entered in order to use stored high frequency cal factors. The instrument will then compute and apply the required correction factor to subsequent measurements. Frequency selection is not required if the sensor being used for the measurement is one for which high frequency cal factors are not stored in the instrument. High frequency cal factors for such sensors are entered manually as described in paragraph 3-15. To enter the signal frequency, proceed as follows:

a. With the instrument in the operating mode, press the ENTER/SHIFT key.

b. Press the FREQ/dBm key. The dB CAL FACTOR display will show "FrE" and the current frequency value will be displayed on the main data display.

c. If the displayed frequency value does not correspond to the frequency of the signal to be measured, adjust the frequency value using the up/down keys. Frequency limits are set by the sensor model (refer to Table 1-2). The up/down keys adjust the displayed value in 0.01 GHz increments.

d. When the correct frequency is displayed, press the ENTER/SHIFT key. OFF IS DISPLAYED ON MAIN DATA DISPLAY IF NO FREQ. VALUE IS SELECTED.

3-13. Filter Selection. Filtering may be adjusted to optimize measurement speed and display stability. Filter time, in seconds, can be adjusted in 0.05 second increments to a maximum of 20.00 seconds. To adjust the filter time, proceed as follows:

a. With the instrument in the operating mode, press the ENTER/SHIFT key.

b. Press the FILTER/WATTS key. The dB CAL FACTOR display will show "FIL", and the current filter time or the word "Auto" indicating default filter values will be shown on the main data display. (Refer to paragraph 4-19 for default filter values.)

c. If the filter time is to be changed, use the up/down keys to bring the displayed filter time to the desired value.

d. Press the ENTER/SHIFT key.

3-14. Reference Level Selection. If dBr measurements are to be made, a reference level must be entered into the instrument. The entered reference level will be subtracted automatically from subsequent measurements in the dBr mode. Reference level may be entered in either of two ways: any reference value from -99.99 dBm to +99.99dBm may be entered, or the current measurement value may be entered as the reference level. The procedures are described below.

a. To enter a reference level using the first method:

(1) With the instrument in the operating mode, press the ENTER/SHIFT key.

(2) Press the SET/LOAD REF key. The dB CAL FACTOR display will show "SEt" and the main data display will show the current reference level.

(3) If the displayed reference level requires adjustment, use the up/down keys to adjust the displayed value until the desired reference level is displayed.

(4) Press the ENTER/SHIFT key.

b. To use the current measurement value as the reference level, press the SET/LOAD REF key while the instrument is in the operating mode. The currently displayed level will be used by the instrument as the reference level for subsequent dBr measurements.

NOTE

The stored reference level will remain unchanged until a new reference level is entered or the instrument is turned off.

3-15. dB Calibration Factor Entry. The dB CAL FACTOR display shows the current sensor high frequency cal factor. Measured levels are automatically corrected in accordance with this calibration factor to compensate for sensor characteristics. The sensor calibration factor can be entered in either of two ways, as follows:

a. The calibration factor is computed automatically by the instrument based on the sensor and frequency selection. (Refer to paragraph 3-12 for frequency selection.)

b. The cal factor may be entered manually from the calibration sheet supplied with the sensor. Adjust the dB CAL FACTOR display using the up/down keys to select the required value. The up/down keys adjust the calibration factor in 0.01 dB steps over a range of -3.00 dB to +3.00 dB. Cal factors entered in this manner will be used by the instrument for subsequent measurements, but will not be stored in non-volatile RAM.

c. Entering a dB cal factor forces the operating frequency to its default value.

3-16. Bus Address Selection (IEEE-488 Option Only). On instruments equipped with the IEEE-488 option, the assigned instrument bus address must be entered if the instrument is to be operated remotely over the bus. The procedure is as follows:

a. With the instrument in the operating mode, press the ENTER/SHIFT key.

b. Press the ADRS/ZERO key. The dB CAL FACTOR display will show "Adr" and the main data display will show the current instrument bus address.

c. Use the up/down keys to change the displayed instrument bus address to the desired number.

d. Press the ENTER/SHIFT key.

e. The new address will be stored in non-volatile memory until changed.

3-17. ZEROING THE INSTRUMENT.

3-18. Zeroing should be performed when the instrument is energized, a sensor has been changed, or the instrument has drifted a significant amount with respect to the signal level being measured. For large signals (measurements taken on range 4, 5 or 6), this may be done once every several hours. For very small signals (measurements taken on range 0, 1, 2, or 3), zeroing should be done before each measurement. When zeroing is performed, the instrument calculates and stores zero corrections for each range, and applies the corrections to subsequent measurements. To zero the instrument, proceed as follows:

a. Ensure that the power sensor is not connected to any power source and that the reading is stable.

b. With the instrument in the operating mode, press the ADRS/ZERO key. Brackets will be shown on both displays during the zeroing routine, and the sensor and instrument should not be disturbed until zeroing has been completed. The displays then revert to normal operation.

3-19. CALIBRATING THE INSTRUMENT.

3-20. The built-in 50 MHz calibrator provides a convenient means for calibrating the instrument. Calibration can be performed any time to assure accuracy. To calibrate the instrument, proceed as follows:

a. Connect the sensor to the 0 dBm 50 MHz connector on the front panel of the instrument.

b. With the instrument in the operating mode, if the CAL annunciator is not lighted, press the CAL/PWR REF key. The CAL annunciator will light to indicate that the 50 MHz calibrator is on. If the calibrator was off, wait 15 minutes for the calibrator to stabilize.

c. Press the FREQ/dBm key. The dBm annunciator will light.

d. Press the ENTER/SHIFT key to select shifted operation.

e. Press the CAL/PWR REF key. The main data display will show "rEF" and the dB CAL FACTOR display will show "CAL".

f. Press the ENTER/SHIFT key. The instrument will execute the calibration routine.

g. When calibration has been completed, the main data display will show 0.00 dBm (+/- any cal factor).

NOTE

If the 50 MHz calibrator is off when the calibration routine is attempted, an error message will be displayed.

h. Press the CAL/PWR REF switch to toggle the 50 MHz calibrator off (if required).

i. Disconnect the sensor from the 0 dBm 50 MHz calibrator connector.

3-21. MAKING A MEASUREMENT.

3-22. To make a measurement, proceed as follows:

a. Energize the instrument and allow a 15 minute warm up.

b. Ensure that the proper sensor is connected to the SENSOR connector. (Refer to paragraph 3-10 for sensor selection.)

c. Ensure that the required measurement parameters have been entered in accordance with paragraphs 3-9 through 3-15, as applicable.

d. Zero the instrument per paragraph 3-17.

e. Calibrate the sensor per paragraph 3-19.

f. Ensure that the instrument is in the operating mode by pressing the FILTER/WATTS, RANGE/dBr, or FREQ/dBm key.

g. Connect the sensor to the signal source to be measured.

h. Read the numerical value of the measured level on the main data display and the unit of measurement from the lighted main data display annunciator.

3-23. GPIB OPERATION.

3-24. If the instrument is equipped with the IEEE-488 option, it can be operated remotely over the bus. Refer to Section IV for details of such operation.

3-25. INITIALIZING THE INSTRUMENT.

3-26. At any time, the instrument can be initialized to all default values by setting the LINE switch to OFF, then back to ON. This will restore all parameter variables to their default values, as follows:

Parameter Variable	Default Value
Mode	Operating
Sensor	No. 1
Measurement Unit	Watts
dB CAL FACTOR	0.00 dB
Frequency	0.00 GHz /OFF
Filter	Auto
Range	Auto
dBr Reference	0.00 dBm
Calibrator	On
Internal Zeroing	Cleared
Internal Reference Calibration	Cleared

SECTION IV
APPLICATION NOTES

4-1. INTRODUCTION.

4-2. This section provides detailed background information on various aspects of operation of the Model 4220. It is assumed that the reader is familiar with the basic operating procedures covered in Section III. This section covers the following topics:

a. Sensor calibration

b. Zeroing

c. Filtering

d. Noise

e. Dynamic range

f. Measurement time

g. High frequency accuracy

h. Chart recorder operation

i. Waveform sensitivity

j. GPIB operation (option)

4-3. SENSOR CALIBRATION.

4-4. General. Two types of calibration are associated with the Model 4220 - instrument calibration and sensor calibration. The instrument (less sensors) must be calibrated using a DC source to ensure interchangeability of sensors. Instrument calibration procedures are covered in Section VI. Sensor calibration data is of two types: linearity and high frequency calibration factors. Sensor calibration data for up to four sensors can be stored in non-volatile RAM.

4-5. 14-Point Linearity Data. Linearity data, also referred to as AC reference frequency linearity data, is supplied with he sensor and can be manually entered into non-volatile RAM. For sensors ordered with the instrument, linearity data is installed before the instrument is shipped.

4-6. At the reference frequency (50 MHz, or 22, 33, 40, 60, or 94 GHz), each sensor has two gain factors for each range: upscale and downscale points. Refer to Figure 4-1. The upscale points are in the range of 5000, which is a gain correction factor. Upscale points are calibrated at the factory at about 70% of full scale. The downscale number is a second order type of correction at about 25% of full scale. Thus, for a diode sensor (7 ranges), there are 14 points; for thermal sensors there are eight points. Ranges 0 and 1 share the same data points.

4-7. High Frequency Calibration Points. In addition to linearity data, there are high frequency calibration points as shown in Figure 4-2. Calibration points covering the entire sensor frequency range are supplied with each sensor. Below 1 GHz, the sensor response is flat, and frequency calibration points need not be entered.

4-8. Figure 4-2 shows data for 17 points; however, space for up to 36 points for each of four sensors is provided in non-volatile RAM. Frequency calibration points need not be in equal frequency increments; however, the entry of data must be done in ascending order of frequency. Generally, for both diode and thermal sensors, a calibration factor of 0 dB is entered at 0.00 GHz so that the instrument may be operated below the first data point. During measurement, frequency calibration points are linearly interpolated and, if a measurement frequency is entered that is outside the range of the sensor selected for the measurement, an error message is displayed.

4-9. ZEROING.

4-10. The automatic zeroing routine of the instrument takes measurements on the lowest five ranges and applies these as correction factors on subsequent measurements. Offsets in the sensor and input amplifiers are linearly corrected in the internal software. Offsets on the highest ranges are below 0.02% of full scale, and do not need correction.

4-11. Input power to the sensor must be removed before the zeroing function is executed or an error message will be displayed. The instrument will perform zeroing, however, if the signal is less than full scale on range 0. This feature provides a great deal of offset capability for temperature effects without rezeroing the input amplifier hardware.

4-12. For full accuracy at low signal levels, power must be removed from the sensor several seconds before zeroing to allow the sensor to settle. This is especially true if a large signal had been applied to the sensor in the previous 20 seconds or so because of the dielectric absorption of the capacitors in diode sensors, and because of thermal retention in thermal sensors. The error resulting from different input conditions can be determined from Figure 4-3 or 4-4, as applicable. The curves in these figures show the decay of measured power after a large signal has been applied. The typical error that can be expected by zeroing too quickly after application of a large signal is equal to the offset power at the time of zeroing.

4-13. The Model 4220 initiates zeroing immediately when the ZERO key is pressed. The user must delay zeroing according to system requirements when the sensors are used over a wide dynamic range. For example, if it is determined from the application that five seconds are required from

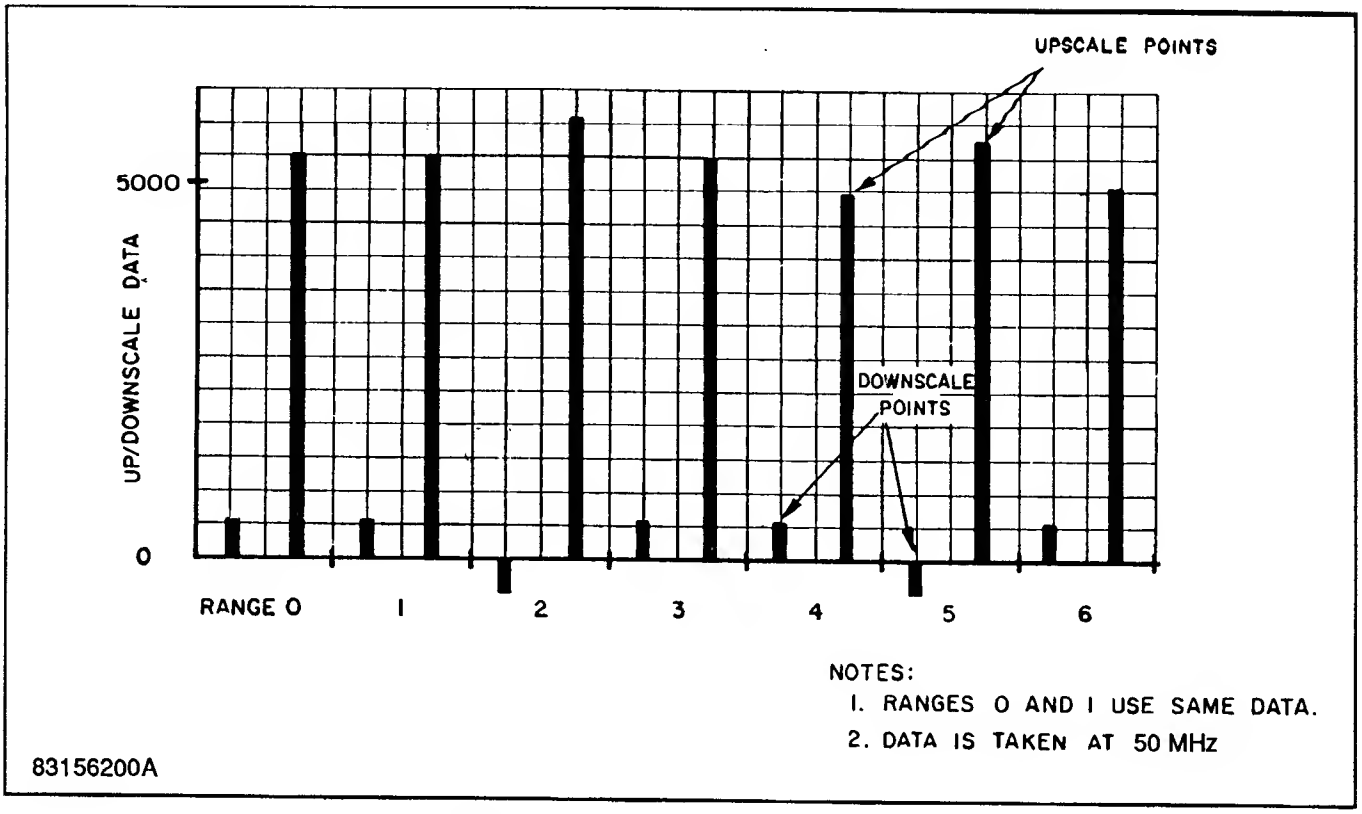

Figure 4-1. 14-Point Sensor Calibration.

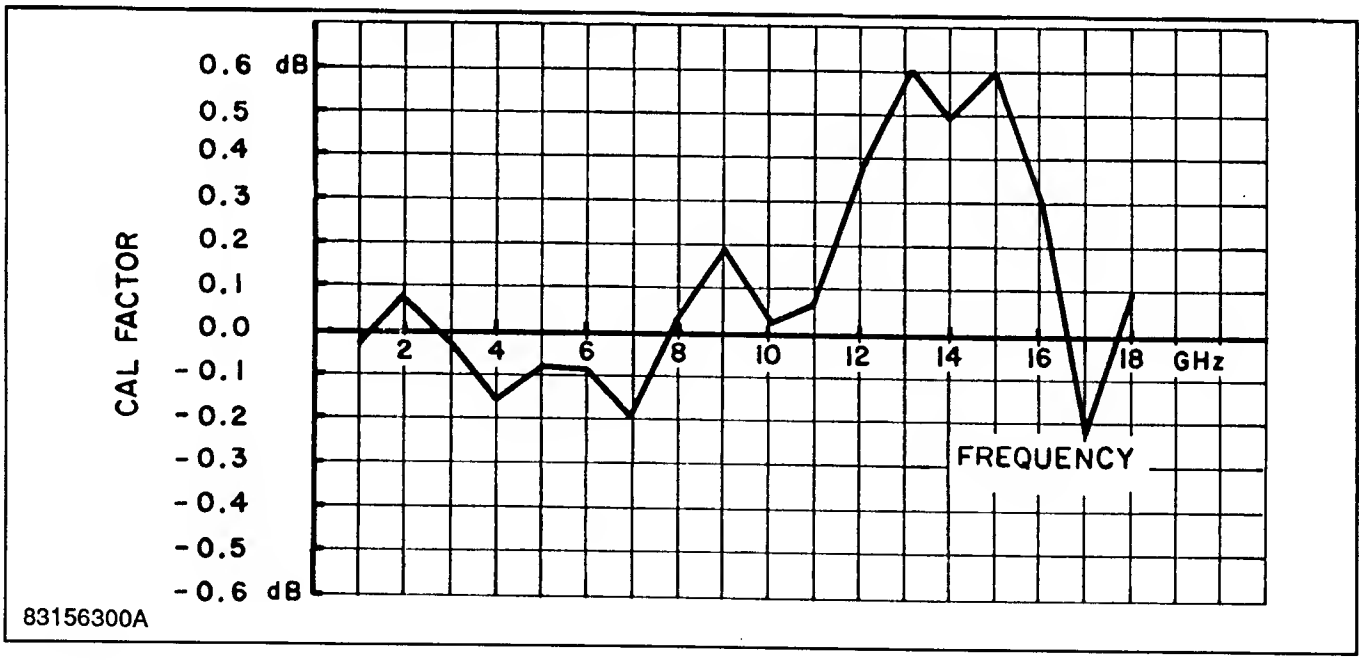

Figure 4-2. Typical High Frequency Sensor Calibration.

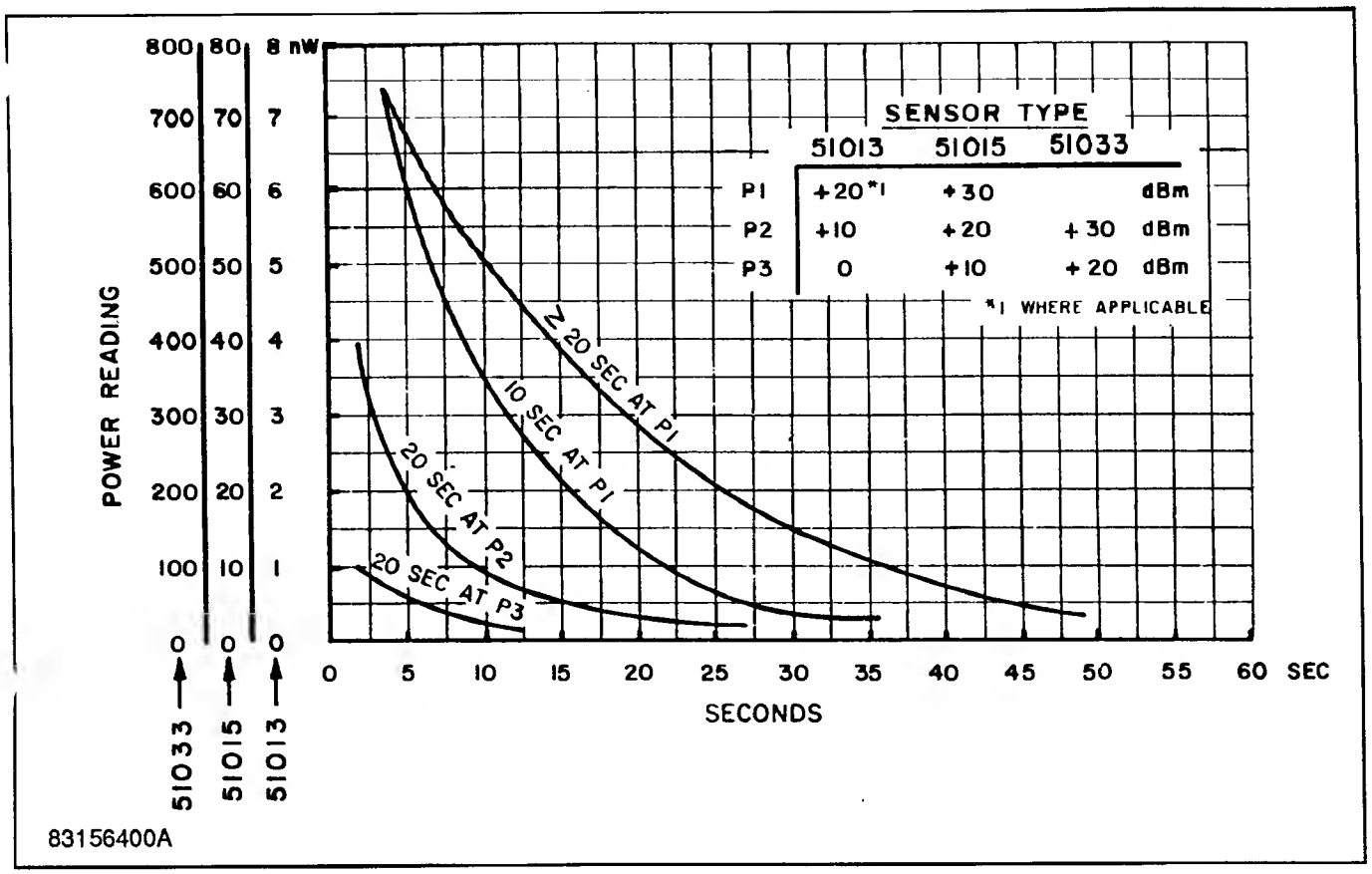

Figure 4-3. Diode Sensor Decay.

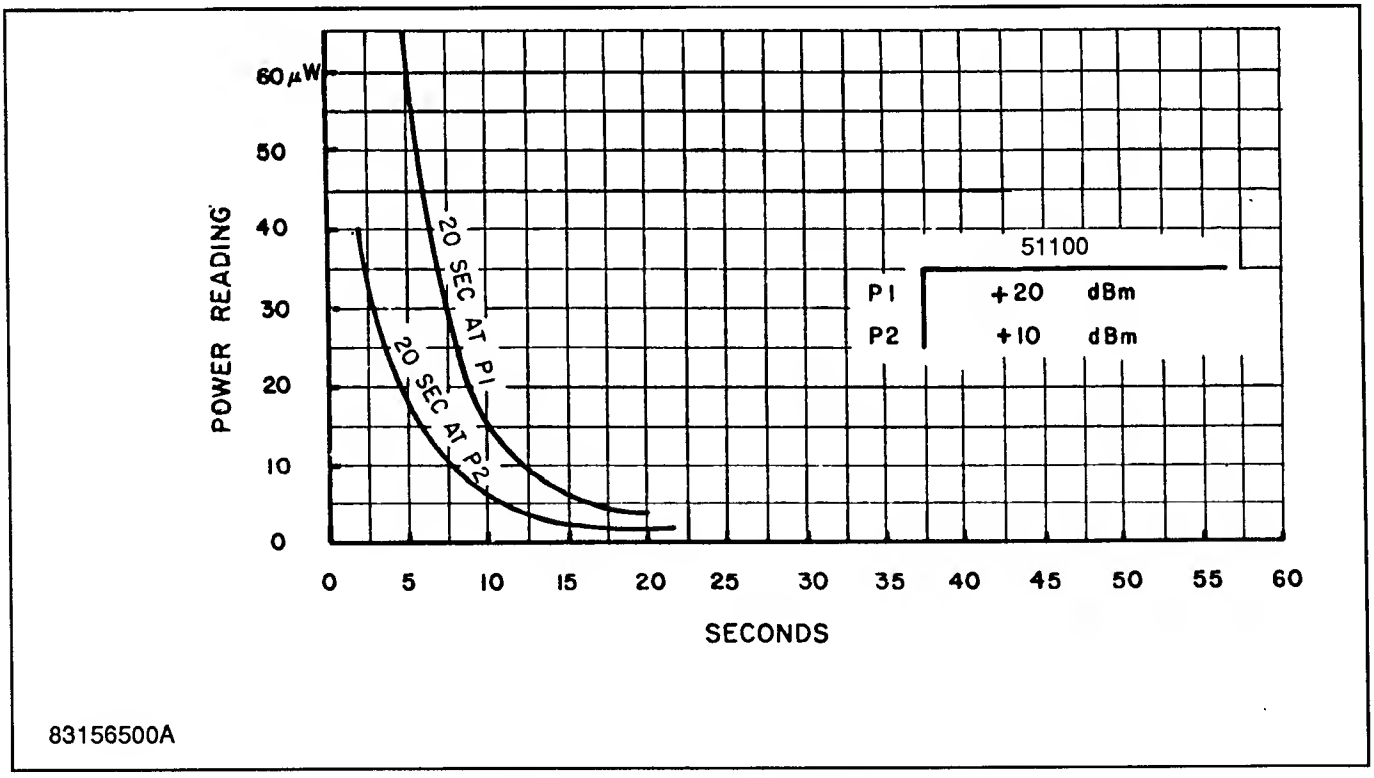

Figure 4-4. Thermal Sensor Decay.

power off to the zeroing operation, then the user should wait five seconds after removing power from the sensor before pressing the ZERO key.

4-14. The zeroing time on each range has been optimized for speed and accuracy. Total zeroing time is 5 seconds.

4-15. Zeroing should be done when the instrument is energized, the sensor has been changed, or the instrument has drifted a significant amount with respect to the signal being measured. For large signals (range 4, 5, or 6), this may be once every several hours, if at all. For very small signals (range 0, 1, 2, or 3), it is recommended that zeroing be done immediately before each measurement.

4-16. DYNAMIC RANGE.

4-17. The hold range mode is useful when it is known that the signal will vary over a certain limited range. (The hold range mode is active when a specific instrument range, other than autorange, has been selected.) In the hold range mode, the decimal point and units will remain fixed. The dynamic range of this mode is limited by the zero offset and the resolution, as shown in Figure 4-5. It can be seen from this figure that the useful dynamic range is 20 dB if the error is to be kept below 0.1 dB.

4-18. FILTERING.

4-19. The Model 4220 employs digital filtering (averaging of measurements) to reduce the noise floor of the instrument and to stabilize measurements. Selectable averaging of up to 400 samples is provided, at an input channel sampling rate of 50 milliseconds, which corresponds to a maximum filter time of 20 seconds. The minimum filtering is one sample or 50 milliseconds. Alternately, the instrument can be programmed to use default filter lengths which are a function of range. The default values are optimized for speed and low noise under general conditions. Default values are as follows:

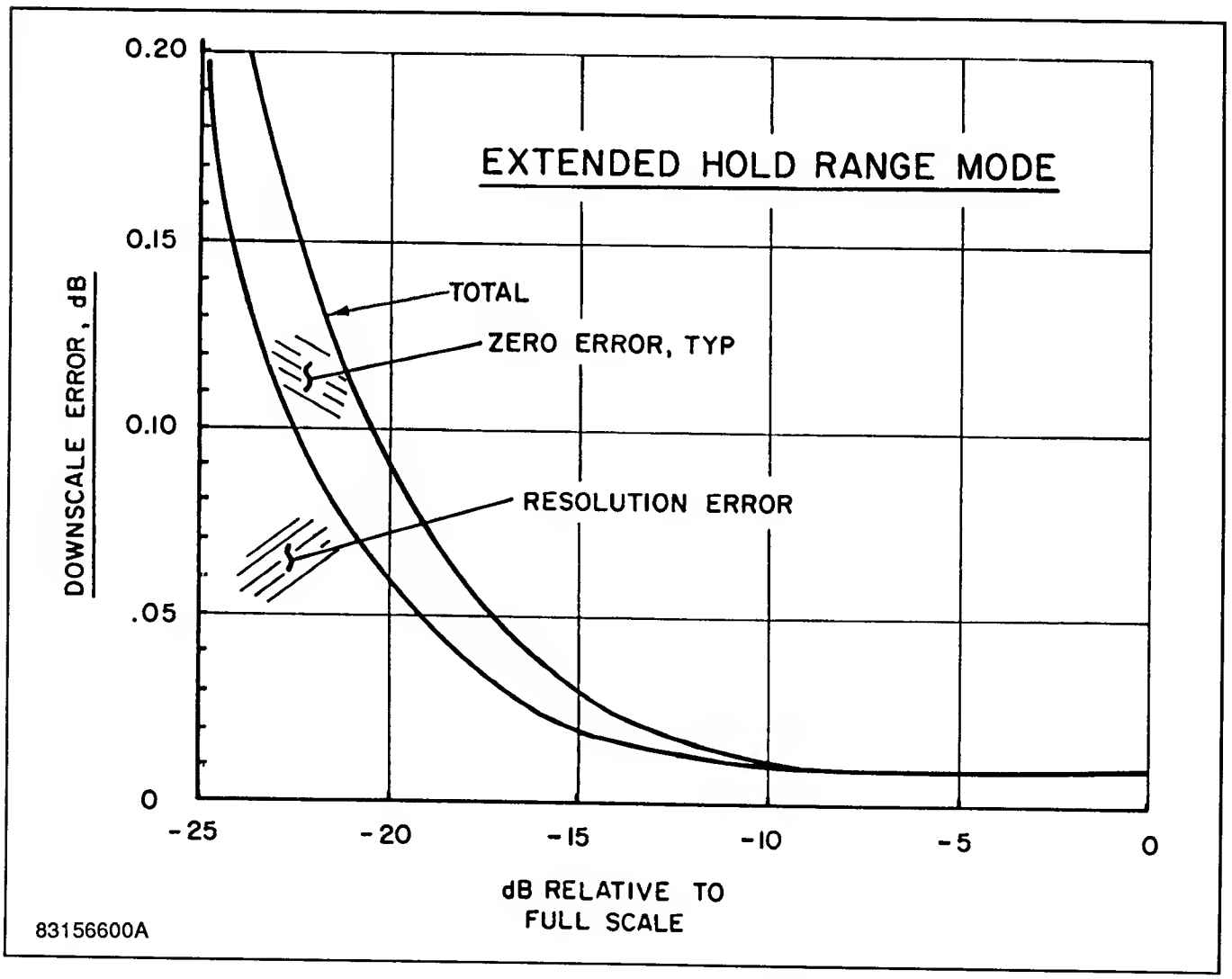

Figure 4-5. Extended Hold Range Mode.

Range	Filter Default Value
0	2.8 seconds
1	0.8 second
2	0.8 second
3	0.8 second
4	0.8 second
5	0.8 second
6	0.8 second

4-20. The filtering technique used is digital pipeline filtering, also referred to as circular filtering or moving average filtering. The displayed measurement is simply an equally weighted average of the last x seconds worth of samples, where x is the filter length in seconds. For purposes of noise and settling time, the number of samples is not important, but the time is important. For example, if a three second filter is used, the noise is the same whether 60 or 600 samples are taken in that interval, provided that the samples are taken above a certain rate. For this reason, filter selection in the Model 4220 is done on the basis of seconds, rather than the number of samples.

4-21. The bottom end sensitivity of the instrument is limited by sensor noise. An RMS noise specification is valid since the sensor noise and the amplifier noise are band-limited and Gaussian. The noise level, specified in picowatts at a certain filter length, is sufficient to calculate the error due to noise at any signal level, for any filter, as shown in the discussion of noise that follows.

4-22. NOISE.

4-23. Noise Reduction. The amount of noise reduction that can be realized has no theoretical limitation, except that drift enters into the picture at filter lengths over 20 seconds. The digital filter has a bandwidth and rolloff curve just as any filter does; the bandwidth can be reduced arbitrarily. The effective noise bandwidth is 0.469/t, where t is the filter length. For example, with a filter length of 4 seconds, the equivalent noise bandwidth is 0.12 Hz.

4-24. Figure 4-6 is a nomograph showing the noise reduction that applies for various filter lengths, given the sensor noise with 2.8 second filtering. (This is the time for which diode sensor noise is specified.) Noise power is inversely proportional to the square root of the filter length. Normally, noise power varies directly with filter bandwidth; however, because power sensors are square-law devices (detected voltage is proportional to power), the noise power is proportional to the square root of the bandwidth. This can be demonstrated with noise measurements. At very low filter lengths (less than 150 milliseconds), however, the noise does not increase without bound for all sensors because the input amplifier noise is restricted with hardware filters to a few Hertz. This additional filtering is not shown in the nomograph.

4-25. Error Computation. Since the noise is Gaussian, both before and after filtering, statistics show the level of confidence factor that can be associated with a given reading. (At medium and high power levels, the confidence factor is essentially unity.) Figure 4-7 shows a typical set of samples and a typical error band specification of 2 sigma. Under these conditions, 95.4% of the readings will fall within ±2 sigma.

4-26. Figure 4-8 shows the confidence factor for other error bands. The error band is expressed in pW, regardless of the power level. (The percentage error band can also be calculated as shown below.) The RMS noise is taken from the sensor specifications and modifies as necessary for filter lengths other than 2.8 seconds. Knowing any two of the three parameters (error band, RMS noise, and confidence factor), the third can be computed. For example, if the sensor RMS noise is 65 pW and the confidence factor is to be 95.4%, the error band is 130 pW, single sided (±130 pW). If this were the case, at a measurement level of 1300 pW the percent error band would be 10%, corresponding to about ±0.44 dB.

4-27. Noise Error Examples. Figures 4-9 and 4-10 show the computed error for the 51013 diode sensor at different power levels, for 2.8 and 10 second filters. To attain these results, the sensor must be at a stable temperature, and zeroing must be done immediately before the measurement is taken.

4-28. Integration of Power. With long filtering, instrument readings may seem erroneous because the filter has not been cleared. For example, with a 20 second filter, if a 2 second RF pulse is applied, the instrument display will indicate a nonzero level for 18 seconds after the pulse has terminated. Additional pulses will be integrated along with the first until, by the process of selective deletion, the pulses are removed one at a time from the filter. Actually, measurement samples are deleted, not the pulses, giving rise to a ramping effect at the instrument display/output. This is shown in Figure 4-11. In all senses, the filter is a simple integrator.

4-29. Clearing of Filter. When long filter times are used, it may become troublesome at times to wait for the filter to clear. If the Auto filter function is selected, the filter is cleared after power changes by 0.02 dB, and filtering then resumes. Clearing can also be accomplished by changing the filter length to any different value and then resetting it using the GPIB bus; however, with bus operation, most of the trigger modes clear the filter at trigger time.

4-30. Partial Results. Measurement time is affected by the filter since valid readings to within a certain error band can be obtained only when the filter is full. If the filter has been cleared, data is available at reduced accuracy immediately after the first 50 millisecond sample. The filter uses the number of samples as a divisor when computing the average, and the output/display does not ramp but homes in on the result instead as the samples accumulate.

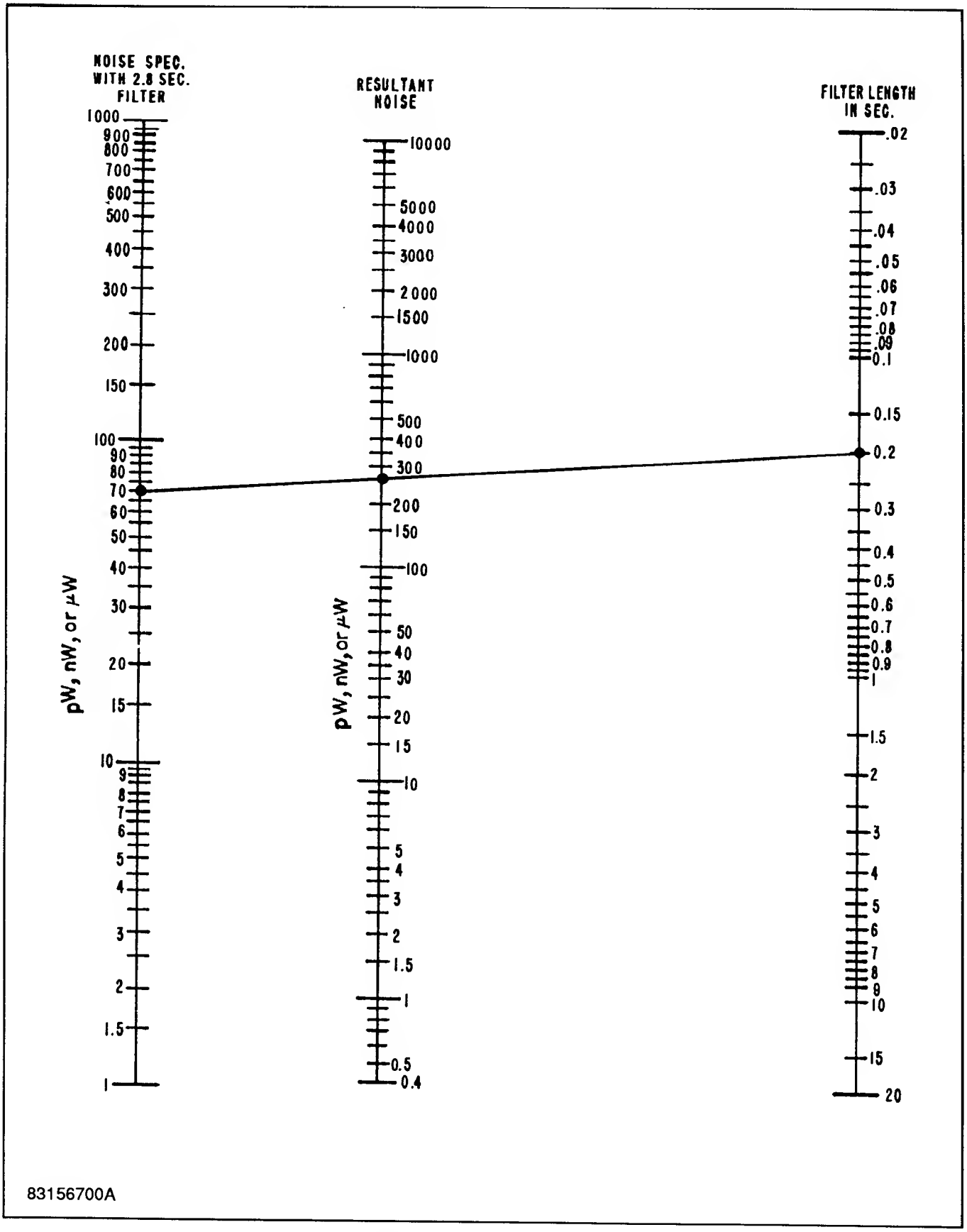

Figure 4-6. Noise Reduction.

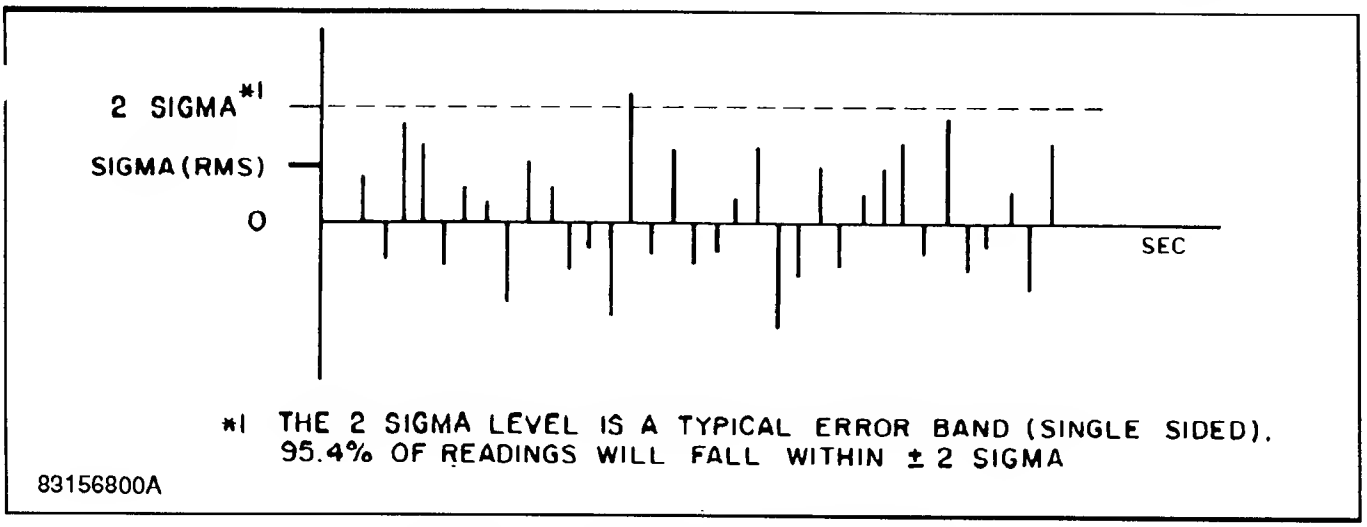

Figure 4-7. Typical Error Band Specifications.

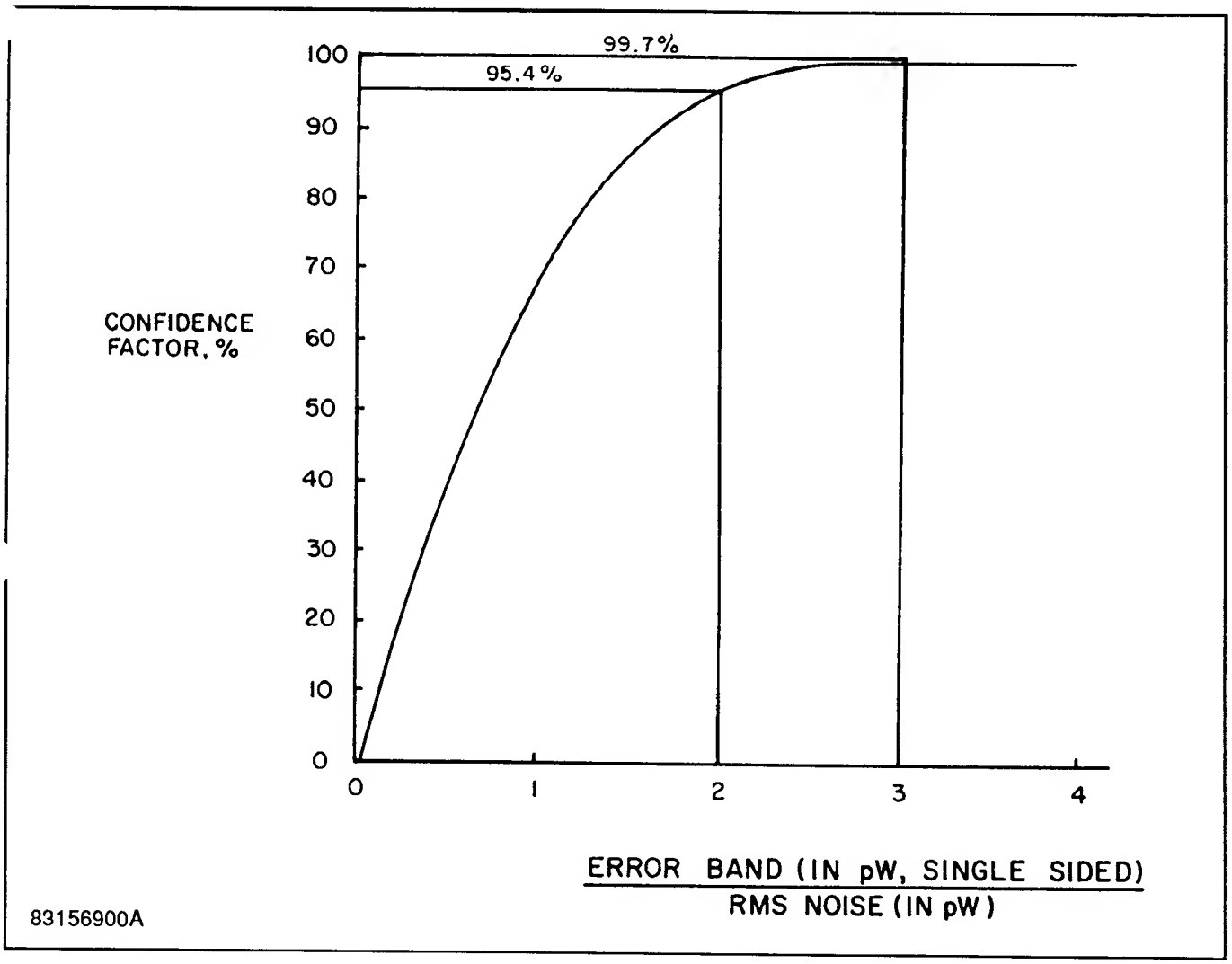

Figure 4-8. Probability of Falling within an Error Band.

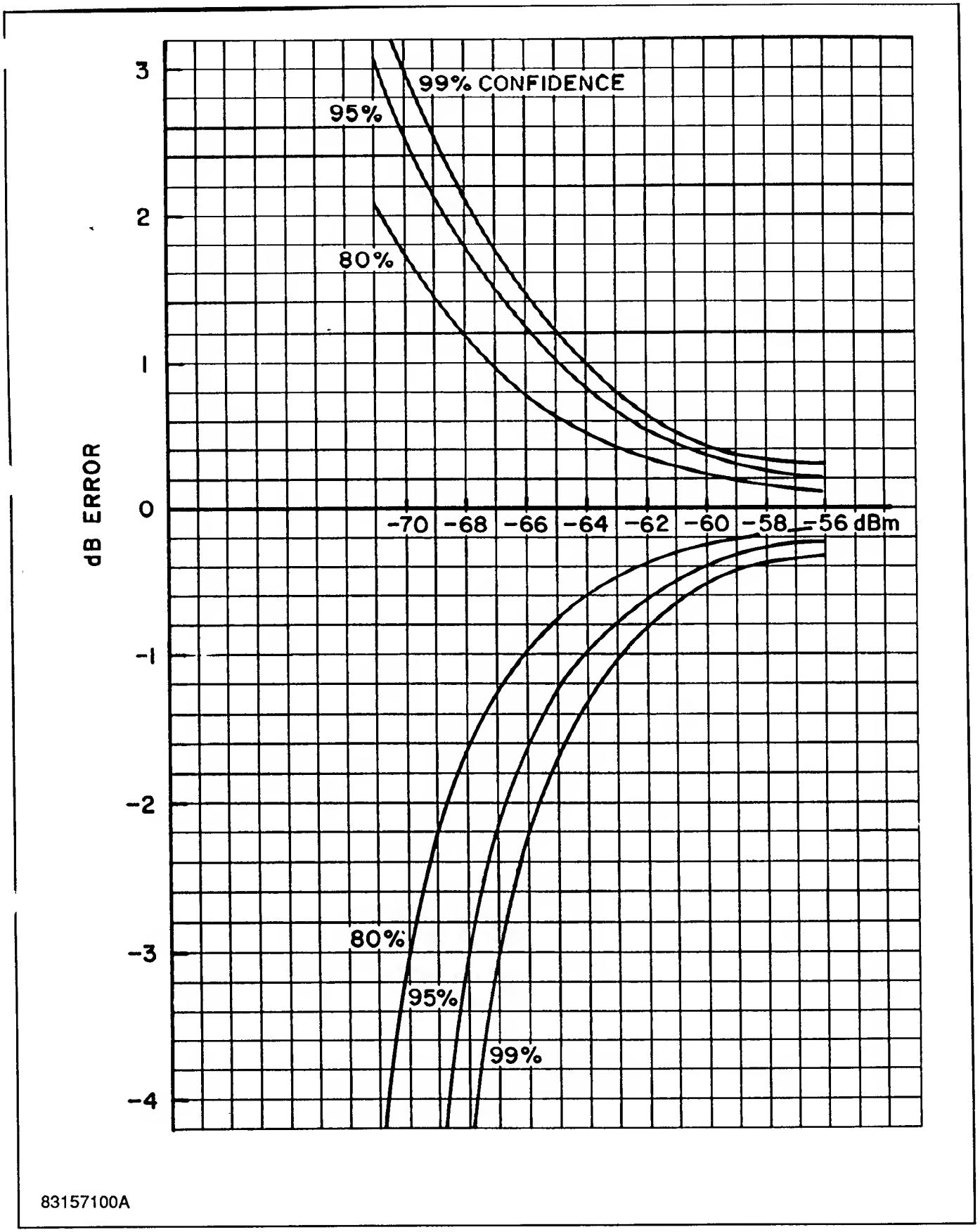

Figure 4-10. Confidence Curves, 51013 Sensor with 10 Second Filter.

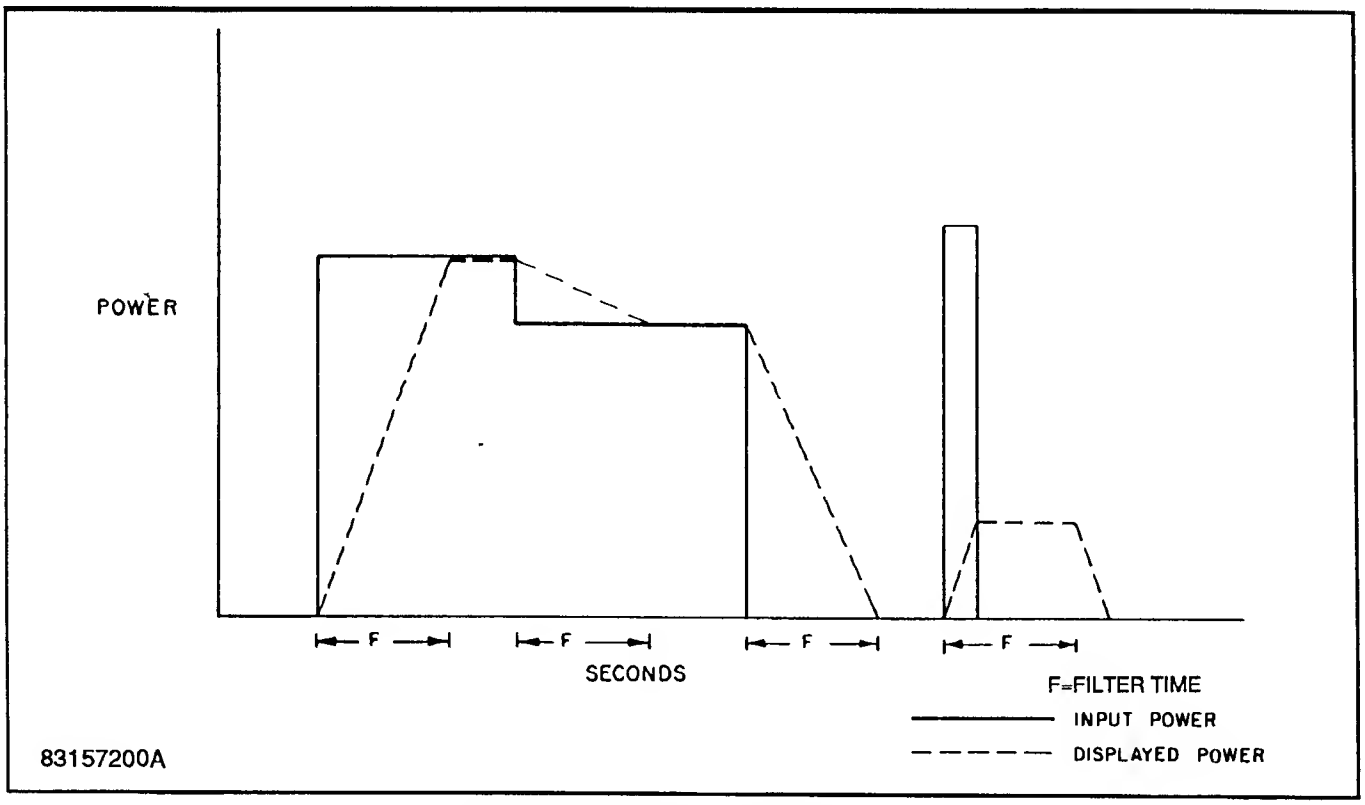

Figure 4-11. Integration of Power.

4-31. MEASUREMENT TIME.

4-32. Step Response. The measurement time from a power input step is the sum of the overhead time and the length of the digital filter, where the overhead time is defined as the time delay due to sensor response time and measurement software (processing). The overhead time is given in paragraph 4-34 for certain conditions.

4-33. Continuous Response. Regardless of the overhead time or the digital filter length, the Model 4220 will output readings at a rate of about 50 milliseconds with the display operating. As the sensor and the digital filter settle, readings will ramp up or down at that rate.

4-34. Overhead Time. Overhead time is <350 milliseconds for diode sensors and <450 milliseconds for thermal sensors under the following conditions:

a. Settling to 99% or 0.04 dB of final power

b. Power step of 10 dB

c. Range does not change

d. Digital filter set to minimum (50 milliseconds, which is a sample of one).

4-35. The power step may be upward or downward. Smaller power steps will decrease this time slightly; larger power steps in the downward direction will increase the time significantly. A 40 dB downward step, for example, will take several seconds to settle to 0.04 dB.

4-36. Digital Filter. The digital filter is a moving average or pipeline filter which simply integrates the readings over the last x seconds, where x is the filter length. A step input to the filter will produce a linear ramp at the output, terminating when the filter is full.

4-37. Default Filter Lengths. Although any filter length from 50 milliseconds to 20 seconds may be chosen, default filter lengths are programmed into the instrument for optimum general conditions. (Refer to paragraph 4-19.) For diode sensors, the range break-points are roughly in 10 dB steps, with the range 0 to 1 break-points at approximately -54 dBm.

4-38. Settled Measurement Time. In the free run settled mode, output data updates are held off until the measurements have settled.

4-39. HIGH FREQUENCY ACCURACY.

4-40. Power measurements, particularly at high frequencies, have a number of uncertainties which generally arise from imperfect SWRs. If all power sources and power meters had impedances that were resistive and equal to Z_o (the characteristic impedance of the measuring system), most problems would disappear. The incident, dissipated, and maximum available powers would all be equal, and the indicated power would differ only by the inefficiency of the power sensor in converting all dissipated power to indicated power. Tuning eliminates most of the SWR effects, but is cumbersome and

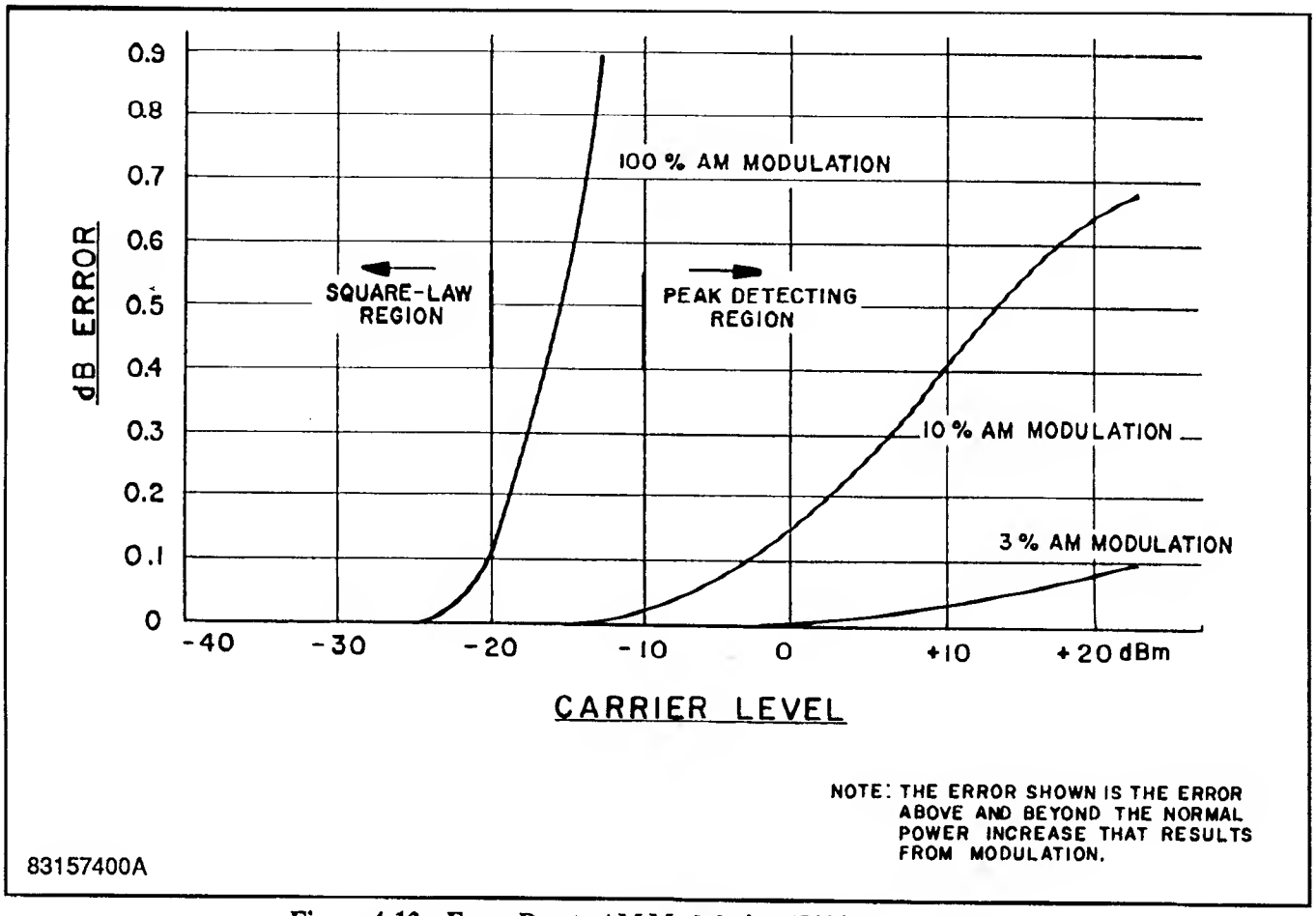

Figure 4-13. Error Due to AM Modulation (51013 Diode Sensor)

4-42. WAVEFORM SENSITIVITY.

4-43. Thermal sensors are insensitive to the waveform because they average RF power over many tens of milliseconds. Modulated signals, non-sinusoidal waveforms, and even pulses can be detected without distortion of the measurement. Thermal sensors are referred to as TRMS responding.

4-44. Diode sensors are also TRMS responding below about -20 dBm (-10 dBm and 0 dBm for attenuated models 51015 and 51033). This response characteristic is obtained because the sensors are dual diode types, and diodes respond in square-law fashion at low and medium levels. This is not an approximation, but rather an inherent effect. This effect results from the fact that the diodes do not turn on and off as switches, but behave as signal dependent resistors instead. Even with no signal input, the diodes have a finite conductance, and this conductance is modulated on a cycle by cycle basis to give a net DC offset proportional to the power.

4-45. The square-law response can be seen in Figure 4-13, where a 100% amplitude modulated signal is shown to have virtually no effect on the measured power at low levels. Of course, frequency modulated and phase modulated signals can be measured at any level, since the envelope of these modulated signals is flat. Frequency shift keyed (FSK) and quadrature modulated signals also have flat envelopes and can be measured at any power level.

4-46. At higher power levels (above approximately -10 dBm for the 51013 sensor), the diodes operate as peak detectors. The Model 4220 is software calibrated to calculate the RF power based on a shaping transfer function (RF to DC) for each sensor type. However, only measurements of RF signals with flat envelopes (CW, FM, PM, FSK, quadrature, etc.) are valid in this region and in the transition region from -20 dBm to -10 dBm.

4-47. CHART RECORDER OPERATION.

4-48. The chart recorder output is a DC voltage from 0 to 13 volts. In the power mode, the output voltage is equal to the digits displayed on the main data display divided by 1000. In the dBm or dBr modes, the output voltage is directly proportional to the level of the RF signal being measured. 0 dBm is at 8.0 volts with a sensitivity of 1.0 volt/10 dB over the range of the sensor. The output impedance is 9.09 kilohms, which gives the user the option of loading it with 1 kilohm, thereby reducing the full scale output to 1 volt. The normal 12-bit resolution is still maintained with this method. With

a 1 megohm load, the circuit is essentially open and the error is small. Absolute accuracy is ±3%

4-49. REMOTE (GPIB) OPERATION.

4-50. Introduction. If the Model 4220 is equipped with the IEEE-488 option, the instrument can be operated remotely through an IEEE-488-1978 interface. The IEEE-488 is a hardware standard which describes the communication and handshaking across the 8-bit parallel bus between a bus controller and up to 15 instruments.

4-51. The Model 4220 interfaces to the bus using a 9914A bus interface IC and tristate buffers. No DMA operations are supported. IEEE-488 capabilities are as follows:

C0	NO CONTROLLER	Capability
SH1	SOURCE HANDSHAKE	Complete capability
AH1	ACCEPTOR HANDSHAKE	Complete capability
RL1	REMOTE LOCAL	Complete capability
DC1	DEVICE CLEAR	Complete capability
DT1	DEVICE TRIGGER	Complete capability
SR1	SERVICE REQUEST	Complete capability
PP0	PARALLEL POLL	No capability
TE0	EXTENDED TALKER	No capability
T6	BASIC TALKER	Complete capability except for talker only
LE0	EXTENDED LISTENER	No capability
L4	BASIC LISTENER	Complete capability except for listener only

4-52. Local Operation. This is the front panel operation of the instrument. The instrument initializes to the local mode on bus power on, and the remote mode becomes active only when the instrument is remote addressed by the bus controller. Once in the remote mode, the instrument can be returned to the local mode in any of three ways: by a GTL (go to local) command from the bus controller, by turning off power to the instrument, or by pressing the front panel (LOCAL) key. The third method can be disabled by a local lockout (LLO) command issued by the bus controller.

4-53. Remote Operation. In the remote mode, all front panel key closures are ignored except for the (LOCAL) key (which may also be disabled by a LLO command from the bus controller). When the instrument is in the remote mode, the front panel REM annunciator is illuminated.

4-54. Bus Address. The IEEE-488 listen/talk address (MLTA) of the instrument can only be set or altered from the front panel of the instrument through use of the ADRS key. Refer to paragraph 3-16.

4-55. Terminating Characters. To inform the instrument that a message has been completed, the bus controller must end all messages with a terminating character. When addressed to listen, the 4220 requires either a carriage return or line feed character. When addressed to talk, the 4220 can send several combinations of terminating characters as required by the controller employed. Selection of terminating characters is done as part of the instrument calibration process. (Refer to table 6-4 and paragraph 6-34 k for setting EOS.)

4-56. Listen Operation. The instrument may be addressed as a listener without regard for remote or local mode. When the listener state is set by the bus controller, the instrument will receive bytes over the bus and place them in its input buffer, and the front panel LSN annunciator will be illuminated. For listen operation, the input buffer is 150 characters long. Only one message can be entered into the input buffer at a time. A second message cannot be sent until the instrument has processed the previous message.

4-57. Talk Operation. When the instrument is requested to talk, the instrument response will depend on how it has been set up. The setup is either through talk modes or talk array commands. Talk modes are associated with making measurements; talk array commands are associated with the downloading of calibration data and instrument states. Refer to paragraph 4-67 for setup of the talk mode.

4-58. Only one instrument at a time can be addressed to talk, but many instruments can be addressed to listen simultaneously. When the Model 4220 is in the talk mode, the front panel TLK annunciator is illuminated. The format for each talk message is different and is explained in the paragraphs that follow.

4-59. IEEE-488 Command Supported. The Model 4220 supports the following standard IEEE-488 commands:

a. Interface Clear Command. The interface clear (IFC) command forces all devices on the bus to clear their interfaces, and returns the instrument to local and the bus to an initialized state, clearing the error condition. This command can only be issued by the bus controller in charge. The Model 4220 responds by clearing the interface and executing the equivalent of the local command.

b. Device Clear. For this instrument, the device clear (DCL) command operates the same way as the IFC command described above.

c. Group Execute Trigger. The group execute trigger (GET) command allows the bus controller to issue a trigger to all instruments on the bus simultaneously. The Model 4220 will save the current reading at the time of the GET command and return it at the time of the next talk message mode. This is in essence a bus latch. The instrument must be set to one of its trigger modes. See paragraph 4-111.

d. SRQ. The service request (SRQ) allows an instrument to inform the bus controller that some special event has occurred. The instrument then expects the bus controller to perform a serial poll to determine what event has occurred. Events that generate service requests include instrument error, measurement error, measurement is ready, and zeroing is completed. When the instrument SRQ is active, the front panel SRQ annunciator is illuminated.

e. Serial Poll. The serial poll (SP) command on the bus allows the bus controller to check the SRQ status byte of each instrument to determine which instrument is requesting service. The byte returned by the Model 4220 is composed of multiple bits that represent different status and error conditions. These conditions are individually maskable, as shown in Table 4-7.

f. Parallel Poll. The parallel poll (PP) command is not supported.

4-60. Number Formatting. Number formatting is shown for each of the commands in the paragraphs that follow, but general rules are as follows:

a. Fixed or floating formats are accepted.

b. The optional + or - may precede the mantissa and/or the exponent.

c. An optional decimal point may appear at any position within the mantissa. A decimal point in the exponent is ignored.

d. The optional "E" for exponent may be upper or lower case.

e. All ASCII characters below and including ";" (3Bh) are considered command delimiters. The ASCII characters " " (20h), "," (2Ch), ";" (3Bh), and ":" (3Ah) are considered numeric delimiters.

4-61. String Format. String formatting is as follows:

a. The programming sequence is in natural order, that is, a function mnemonic is sent first, followed by the argument value (parameter), if applicable.

b. The data strings sent to the instrument are not case sensitive. This means lower case and upper case are the same.

c. Spurious numbers occurring in the listen string are ignored.

d. All block modes have formatted data arrays or ASCII strings. See Tables 4-3 and 4-4 for commands and paragraphs 4-82 thru 4-106 for format..

4-62. Listen Parameter Commands. Listen parameter commands are listed in Table 4-1. These are commands, received by the instrument, that expect one numerical value to follow for setting a particular operating condition. Except as noted in the table, these commands correspond to specific front panel commands. Key commands correspond to single keystrokes; non-key commands are submodes or menu types of data entry.

4-63. The numeric value (parameter) can be sent in the next listen string if the listen parameter command was the last value of the previous string. If, for any reason, a command is sent without a parameter following the command, the CL command can be used to clear the active command, or a new command can be used. The parameter number listed in Table 4-1 is the number returned when the talk parameter mode (talk mode 6) is exercised.

TABLE 4-1. LISTEN PARAMETER COMMANDS

Mnemonic	Function and Limits	Description	Parameter No.
SS #	Sensor select #1-4	Corresponds to SENSOR SELECT keystoke	1, N
FL #	Filter time select # 0.05 to 20.00 in 0.05 steps	Corresponds to FILTER keystoke	3, N (0=FA)
FR #	Frequency select # 0-110	Corresponds to FREQ keystroke (sensor dependent)	4, N
RS #	Range select # 0-6	Corresponds to RANGE keystoke	5, N (-1=RA)
SR #	Set dBr reference # -99.99 to 99.99 in 0.01 steps	Corresponds to SET keystroke	6, N
TM #	Talk mode # 0-6	Sets talk mode for IEEE-488 bus operation	8,N
SM #	SRQ mask # 0 -255	Sets SRQ mask for IEEE-488 bus operation	11, N
FD #	dB cal factor # -3.00 to 3.00 in 0.01 steps	Selects dB cal factor function	10, N

4-64. Listen Action Commands. Listen action commands are listed in Table 4-2. These commands initiate an action without any parameters being sent. The key commands correspond to single instrument keystrokes.

4-65. Listen Array Commands. Listen array commands listed in Table 4-3 transfer arrays of data (more than one parameter) to the instrument. Sensor data and DC calibration data are typical data. The data array is formatted as in paragraphs 4-87, 4-94, and 4-104. The actual amount of data depends on the specific command being used. Listen array commands are only operable over the bus, and have no application from the front panel.

4-66. The talk array commands listed in Table 4-4 build a talk string in the talk buffer for transmission. Not for general purpose measurement (the talk modes are used for that), the talk array commands are used for transmitting arrays of data (more than one parameter), such as sensor data and DC calibration data. The buffer contents are dispersed at the time of the next instrument talk request. These commands automatically change the talk mode to talk mode 7, then reset the Model 4220 to its previously selected talk mode. This is the only time that the instrument uses the talk buffer or talk array mode. Talk array commands are operable only over the bus.

4-67. Talk Modes. When the Model 4220 is requested to talk, it responds according to how it has been set up. The talk setup is either through talk array commands or talk modes. Talk modes are associated with making measurements; talk array commands are associated with downloading of calibration data and instrument states. The talk modes are described in the following paragraphs.

TABLE 4-2. LISTEN ACTION COMMANDS

Mnemonic	Function	Description	Mnemonic	Function	Description
AD	Address	Calls up instrument bus address	MS	Measure settled	Sets settled measurement mode
CF	Calibrator off	Turns off 50 MHz calibrator	PW	Watts select	Corresponds to WATTS keystroke
CL	Clear	Clears error number and error	RA	Autorange	Sets instrument to autorange
CN	Calibrator on	Turns on 50 MHz calibrator	RB	Recorder bottom	Sets recorder output to 0.0 volt
CP	Calibrate	Corresponds to CAL keystroke	RN	Recorder normal	Sets recorder output to normal operation
DB	dBm select	Corresponds to dBm keystroke	RT	Recorder top	Sets recorder output to +10.0 volts
DF	Display off	Turns off instrument display	TF	Trigger filtered	Selects filtered trigger
DN	Display on	Turns on instrument display	TN	Trigger normal	Selects normal trigger
DR	dBr select	Corresponds to dBr keystroke	TR	Bus trigger	Bus trigger command
FA	Auto filter	Sets instrument to auto filter	TS	Trigger settled	Selects settled trigger
LR	Load reference	Corresponds to LOAD REF keystroke	ZR	Instrument zero	Corresponds to ZERO keystroke
MF	Measure filtered	Sets filtered measurement mode	:D	Decrement cal numeric value	Corresponds to down keystroke
MN	Measure normal (free run)	Sets normal free run measurement mode	:E	Enter	Corresponds to ENTER keystroke
			:L	Return to local	Corresponds to (LOCAL) keystroke
			:U	Increment cal numeric value	Corresponds to up keystroke
			?ID	Talk instrument ID	Calls up instrument identification

TABLE 4-3. LISTEN ARRAY PARAMETER COMMANDS

Mnemonic	Function	Description
SI	Sensor ac calibration data in	Refer to paragraph 4-84
DI	DC calibration data in	Refer to paragraph 4-101
FI	Sensor high frequency calibration data in	Refer to paragraph 4-92

TABLE 4-4. TALK ARRAY COMMANDS

Mnemonic	Function	Description
SO	Sensor calibration data out	Refer to paragraph 4-88
DO	DC calibration data out	Refer to paragraph 4-104
FO	Sensor high frequency calibration data out	Refer to paragraph 4-96

TABLE 4-5. TALK MODES

Talk Mode	Description
0	Talk measurement floating point
1	Talk measurement with units
2	Talk error
3	Not used
4	Talk channel status
5	Talk instrument status
6	Talk parameter
7	Talk array
8	Not used

4-68. The Model 4220 supports seven talk modes of operation, as listed in Table 4-5. Once the talk mode has been set, the bus controller need only tell the Model 4220 to talk and it will respond according to the talk mode.

4-69. Talk modes 0 through 6 can be set directly by use of the talk mode (TM) command. For these modes, the instrument will remain in the selected mode until the talk mode is changed or until a talk array command is received. Talk mode 7 is a temporary talk mode that is automatically enabled in response to a talk array command. This mode cannot be set by the bus controller directly. This temporary talk mode is disabled when the talk array operation is complete.

4-70. The default condition for the talk mode is 0. The talk modes are described individually in paragraphs 4-71 through 4-80.

4-71. Talk Mode 0 (Talk Measurement Floating Point). The talk mode 0 format is as follows:

#1,#2

where:

#1 is the error flag (1 = error, data invalid).

#2 is the measurement in floating point notation in the units selected (dBm, dBr, or milliwatts). In watts mode, the unit is fixed at mW.

Examples:

0,0.00E00 - No error, power is 0.00 dBm

1,0 - Under range error at -75.00 dBm

0,98.9E-6 - No error, power is 98.9 nW

4-72. Talk Mode 1 (Talk Measurement with Units). The format for talk mode 1 is as follows:

#1,$1

where:

#1 is the error flag (1 = error).

$1 is the measurement. The format is fixed point followed immediately by a three character string that indicates the unit of measurement. Possible units are "dBm", "dBr", "nW", "uW", "mW", and "W". If needed, the string can be parsed externally into a number and a three character message.

Examples:

0,0.00dBm - No error at 0.00 dBm

1,0dBm - Under range error at -75.00 dBm

0,98.9uW - No error at 98.9 microwatts

4-73. Talk Mode 2 (Talk Error). The talk mode 2 format is as follows:

#1,#2,#3

where:

#1 is the instrument error number. A 0 will always be reported in this position.

#2 is the measurement error, from 0 to 99. A 0 indicates no error. Refer to Table 4-6 for error messages.

#3 is the channel reporting errors. A 0 will always be reported in this position.

Execution of this talk mode automatically clears the instrument error after it has been reported. If more than one error occurs, the instrument will indicate the first one that occurred.

Examples:

0,0,0 - No error is reported

0,3,0 - Power level is underrange

4-74. Talk Mode 3 (Talk Error with Message). Not used by the 4220.

4-75. Talk Mode 4 (Talk Channel Status). The format for talk mode 4 is as follows:

TABLE 4-6. ERROR MESSAGES

Error Message Code	Description
0	No Errors
1	Number entry out of range for parameter set.
2	Unused
3	-LO- indication on display. Is caused by a. Power level below amount allowed in dBm display during autorange b. Power level below amount allowed for range set in watts or dBm display.
4	-HI- indication on display. Is caused by a. Power level above amount allowed in dBm display during autorange. b. Power level above amount allowed for range set in watts or dBm display.
5	Occurs when input channel attempts to autorange below the range 0. Caused by incorrect zeroing of channel or a sensor which is damaged or not connected.
6	Unable to zero instrument because power is applied to the sensor, the sensor is damaged, or the sensor is not connected.
7 thru 23	Unused
24	Frequency out of range of entry. This error applied for sensors not calibrated at the default frequency of 0 GHz. The instrument initializes to 0 Ghz.
25 thru 38	Unused
39	Calibration attempted when power exceeds ±3 dB of the 0 dBm reference, or when calibration is attempted at ±3 dB from -10 dBm, +10 dBm or +20 dBm.
40 thru 41	Unused
42	Calibration attempted before digital filter is full. Operators must wait until the default filter or set filter time has elapsed before calibrating.
44 thru 95	Unused
96	During calibration of ADZERO, fullscale was not done.
97	Unit has memory protection jumper engaged during operation.
98	Unit has not been initialized and requires the memory protection jumper to be engaged.
99	On some 4220 options, the GPIB is not installed.

#1,#2,#3,#4,#5,#6,#7

where:

#1 is always 1 in the 4220

#2 is always 1 in the 4220

#3 is the measurement units that the channel is set;

0 Power in watts, milliwatts, microwatts, or nanowatts

1 Power in dBm

2 Power in dBr

#4 indicates the trigger mode of operation;

0 Measure Normal (also known as free-run)

1 Measure Filtered

2 Measure Settled

3 Trigger Normal

4 Trigger Filtered

5 Trigger Settled

#5 is always 0 in the 4220

#6 is always 0 in the 4220

#7 is the software version number.

4-76. Talk Mode 5 (Talk Instrument Status). The format for talk mode 5 is as follows:

#1,#2,#3,#4

where:

#1 is always 0 in the 4220

#2 indicates calibrator status;

0 off

1 on

#3 is always 0 in the 4220

#4 is always 0 in the 4220

4-77. Talk Mode 6 (Talk Parameter). The format for talk mode 6 is as follows:

#1,#2

where:

#1 is the active parameter number (0 = no parameter selected).

#2 is the active parameter value, for example "frequency". The units are defaulted.

4-78. This command returns two numbers which describe the current "opened" or selected parameter in the instrument and its value. For example, the frequency to which the instrument is set can be read over the bus. To read a parameter, it must be "opened" first as described in paragraph 4-79. A parameter in the Model 4220 is defined as a front panel or bus command that allows or requires a numerical value to be entered into it. The parameters and parameter numbers are listed in Table 4-1. The data sent over the bus is the same as the data that would appear on the instrument displays when the parameter is selected.

4-79. To use this talk mode, the instrument is first placed in talk mode 6 and a parameter is then opened (made active) by pressing the appropriate key or by sending the bus command. No numeric value should follow and the clear command should not be used. Then, while the parameter is active, a talk command is issued to the instrument and the data for that parameter is sent out on the bus. A parameter can be deactivated by simply entering a number or sending another command.

Examples:

0,0 - No parameter is active and the second value should be ignored

10,-3.00 - The dB cal factor is currently set to -3.00 dB.

5,1 - Range 1 is set.

4,1.23 - The frequency is set to 1.23 GHz

4-80. Talk Mode 7 (Talk Array). Each of the different talk array commands has a different format. (Refer to the applicable section of paragraph 4-69.) This talk mode is not directly settable by the bus controller; it is set internally automatically by execution of one of the talk array commands. Talk mode 7 builds a data string in the talk buffer for a one time transmission. It is used to send an array of numerical data or a string of character data, such as sensor and/or calibration data. Once executed, this mode is automatically cleared to its previously selected value or default condition.

4-81. IEEE-488 BUS ONLY COMMANDS.

4-82. General. The following paragraphs cover commands that are available only under remote control on the bus.

4-83. Talk Mode (TM) Command. The talk mode command is used to change to a selected talk mode. The range of data for this command is from 0 to 6. Talk mode 7 can only be set indirectly by execution of a talk array command. The talk mode command is classified as a listen parameter command.

Example:

TM1 - Set talk mode 1 which is talk measurement with units.

4-84. SI Command. Used in conjunction with the SO command, this command is used to send a portion of the sensor calibration data to the Model 4220 in the form of an

array of numeric data. In this way, sensor data can be transferred from one instrument to another, or stored on a disk.

4-85. The data is the sensor model, sensor S/N, and the 14 point linearity data (AC calibration data) for a selected sensor. This command complements the SO command over the bus, and the SO command would normally be the source of the data string for this command. The SI command is classified as a listen array command.

4-86. In addition to the 14 point linearity data, each sensor has high frequency calibration data, which is loaded with the FI command. (See paragraph 4-92.)

4-87. The format for the SI command is as follows:

SI sensor model, sensor serial number,
U0,U1,U2,U3,U4,U5,U6,D0,D1,D2,D3,D4,D5,D6

where:

Sensor model is a number in the form 51XXX, whereXXX is a three digit number sent to the instrument. Sensors must be resident in the instrument firmware.

Sensor serial number is from 0 to 9999, representing the last 4 digits of the sensor's full serial number.

U0 through U6 are the upscale gain factors (1000 to 9999, nominally 5000).

D0 through D6 are the downscale factors (-999 to +999).

Each numeric value must be separated by a valid delimiter.

Example:

SI13,1234,5012,5003,5032,5013,4995,5005,4891,
-20,-21,2,-3,-14,15,6

4-88. SO Command. Used in conjunction with the SI command, this command is used to send sensor 14 point linearity data out to the bus controller. (Refer to the SI command description for the general use of these commands.) Sensor data also includes high frequency calibration data, but this data is handled with the FI command. See paragraph 4-92.

4-89. When executed, the SO command instructs the instrument to build an array of numeric data in the talk buffer for transmission by the next talk request. The array consists of sensor model, sensor S/N, and numeric data representing the 14 point linearity data (AC calibration data) for a selected sensor. This command complements the SI command over the bus, and the SI command would normally be the destination of the data string of this command. The SO command is classified as a talk array command.

4-90. The talk mode is set temporarily to talk mode 7 (talk array) when this command is executed. After execution, the talk mode is reset. A clear command will also reset the talk mode.

4-91. Formats are as follows:

a. To the instrument in a listen string: SO

b. From the instrument in the next talk string: sensor model, sensor serial number, U1,U2,U3,U4,U5,U6,D0,D1,D2,D3,D4,D5,D6, where the format descriptions are the same as in paragraph 4-87. Each numeric value must be separated by a valid delimiter.

Example:

To the instrument in a listen string: SO

From the instrument in the next talk string:
13,1234,5023,5001,5012,5010,4997,5005,5003,10,
13,-2,-23,14,-15,6

4-92. FI Command. Used in conjunction with the FO command, this command is used to send sensor high frequency calibration data to the Model 4220 for a selected sensor in the form of an array. In this way, sensor data can be transferred from one instrument to another, or stored on a disk. In addition to the high frequency calibration data, there is 14 point calibration data for the sensor, but this is handled by the SI command.

4-93. The data is for a selected sensor. This command complements the FO command over the bus, and the FO command would normally be the source of the data string for this command. This command is classified as a listen array command. Data is loaded in blocks from 1 to 12 pairs.

4-94. The command format is as follows:

FI n, FRn, CRn, FRn+1, CFn+1, ... FRN+11, CFn+11

where:

n is the table number pointer, from 0 to 35.

FRn is the first frequency of this group, from 0.00 to 110 GHz in 0.01 GHz increments. It is sensor dependent.

CFn is the first dB cal factor for this group, from -3.00 to +3.00 dB in 0.01 dB increments.

Each numeric value must be separated by a valid delimiter.

4-95. The total number of frequency points is limited to 36 for sensors 1 through 4. The table number pointer is the beginning location for the frequency/dB cal factor pairs. The pointer must not exceed 24 if the group contains 12 points, for a total of 36 points. Frequency cal points must be in numerical order of frequency. Generally, the first point is at 0 GHz, with a cal factor of 0., so

Example:

FI0,0.00,0.00,1.00,-0.05,2.00,-0.07,3.00,0.10,4.00,
-0.06,5.00,-0.05,6.00,0.00,7.00,0.13,8.00,0.42,
9.00,0.34,10.00,0.00,11.00,0.15,

FI12,12,.12,13,-.13,14,1.14,15,.85

4-96. FO Command. Used in conjunction with the FI command, this command is used to send sensor high frequency calibration data out to the controller. Refer to the FI command description for the general use of these commands. Data points are loaded in blocks of 12.

4-97. When executed, this command instructs the instrument to build an array of numeric data in the talk buffer for transmission by the next talk request. The array consists of numeric data representing the dB cal factor information for a selected sensor. The FO command is classified as a talk array command.

4-98. The talk mode is temporarily set to talk mode 7 (talk array) when this command is executed. After the command has been executed, the talk mode is reset to talk mode 0 (talk measurement). A clear command will also reset the talk mode.

4-99. The format for the FO command is as follows:

a. To the instrument in the listen string: FO n

b. From the instrument in the next talk string: FRn, CRn, FRn+1, CRN+1, ... FRn+11, CFn+11

where:

n is the table number pointer, from 0 to 35.

FRn is the first frequency of this group, from 0.00 to 110 GHz in 0.01 GHz increments. It is sensor dependent.

CRn is the first dB cal factor for this group, from -3.00 to +3.00 dB in 0.01 dB increments.

Each numeric value will be separated by a comma.

4-100. Refer to the FI command for limitations on the pointer and starting frequencies, and for general use of this command.

Example:

Command sent to the instrument: FO 0

Numeric array built into the talk buffer:
0.00,0.00,1.00,-0.05,2.00,-0.07,3.00,-0.10,4.00,
-0.06,5.00,-0.05,6.00,0.00,7.00,0.13,8.00,0.42,
9.00,0.34,10.00,0.00,11.00,0.15

Command sent to the instrument: FO 3

Numeric array built into talk buffer:
3,00,-0.10,4.00,-0.06,5.00,-0.05,6.00,0.00,7.00,
0.13,8.00,0.42,9.00,0.34,10.00,0.00,11.00,0.15,
12.00,0.32,13.00,0.25,14.00,0.43

4-101. DI Command. Used in conjunction with the DO command, this command is used to send DC calibration data to the instrument. In this way, calibration can be done in an automatic test station. Calibration data can also be retrieved from an already calibrated unit and stored on a disk.

4-102. The data is a gain constant for each range and an ADZERO term which is a downscale adjustment. All are stored in nonvolatile RAM.

4-103. The DI command complements the DO command. It is classified as a listen array command. The format is as follows:

DI G0,G1,G2,G3,G4,G5,G6,ADZERO

where:

G0 through G6 are the gain constants for ranges 0 through 6, ranging from 4000 to 7500 (nominally 5000)

ADZERO is the A/D converter downscale adjust ment, ranging from -10 to +10, nominally 0.

Each numeric value must be separated by a valid delimiter.

Example:

DI 5000,5001,5002,5003,5004,5005,5006,-1

4-104. DO Command. Used in conjunction with the DI command, this command is used to load DC calibration data out to a controller for later re-cntry into the instrument. When executed, this command instructs the instrument to build an array of numeric data in the talk buffer for transmission by the next talk request. The array consists of a gain constant for each range, and an ADZERO term which is a downscale adjustment. They are stored in nonvolatile RAM, and is classified as a talk array command.

4-105. The talk mode is temporarily set to talk mode 7 (talk array) when this command is executed. After the talk command has been executed, the talk mode is reset to talk mode 0 (talk measurement). A clear command will also reset the talk mode.

4-106. The formats for the DO command are as follows:

a. To the instrument as a listen string: DO

b. From the instrument in the next talk string: G0,G1,G2,G3,G4,G5, G6, ADZERO

where:

G0 through G6 are the gain constants for ranges 0 through 6, from 4000 to 7500 (nominally 5000, except range 6, which is 6635)

ADZERO is the A/D converter downscale adjust ment, from -10 to +10 (nominally 0)

Each numeric value must be separated by a valid delimiter.

TABLE 4-7. SRQ MASKS

Bit	Description
0	Set bit indicates that an instrument error has occurred
1	Set bit indicates that a measurement error has occurred
2	Set bit indicates that a measurement is ready
3	Set bit indicates that a zeroing command is complete
4	Not used; should be reset (0)
5	Not used; should be reset (0)
6	Set bit indicates that an SRQ is active; this is a summary bit used in serial poll, not a masked bit
7	Not used; should be reset (0)

Example:

To the instrument in a listen string: DO

From the instrument in the next talk string:
5000,4889,5002,5029,5034,4990,6645,-1

4-107. DF Command. This command is classified as a listen action command. Its functions are to blank the front panel display for secure ATE applications and to speed up operations by reducing the number of tasks that have to be performed by the Model 4220. When the display is turned off, the display hardware is still functional, but it is not updated for certain types of information. The data that is still displayed is the instrument IEEE-488 bus status. This data is displayed on the REM, TLK, LSN, and SRQ annunciators.

4-108. DN Command. This command enables the front panel display, complementing the DF command. This command is classified as a listen action command.

4-109. SM (SRQ Mask) Command. This command is used to set the SRQ mask which selectively enables service requests generated by the Model 4220. This command is classified as a listen parameter command. The range of numeric entry is from 0 to 255. The SRQ mask is logically ANDed with the SRQ sources to determine if an SRQ should be generated. The SRQ bit map is shown in Table 4-7. For more information on SRQ and the related serial poll, refer to paragraph 4-59.

Examples:

SM 0 - Disable all service requests

SM 2 - Enable SRQ only on measurement errors

SM 8 - Enable service request only when a zeroing operation is complete

4-110. MEASURED AND TRIGGERED OPERATION AND SETTLED READING.

4-111. General. Three measurement modes and three triggered modes are available over the bus. They are:

a. Measure Normal (also known as free-run)

b. Measure Filtered

c. Measure Settled

d. Trigger Normal

e. Trigger Filtered

f. Trigger Settled

The instrument must be in remote bus operation to invoke these modes of operation. When in local operation, only measure normal is available. The three measurement modes are each self triggering (free running) while the triggered modes require a bus trigger command. The operation of each mode is modified by filter selection and range selection. See paragraphs 4-16 and 4-18. The modes are described below.

4-112. Measure Normal (MN). This is the mode to which the instrument initializes at power up when the local command is issued in bus operation or when returning from a calibration mode.

4-113. Measure Filtered (MF). In this mode, the front panel display is self triggered and continuously updated. In response to a step change in power of approximately 0.02 dB or an internal range change, the front panel displays the "---- ----" (dashes) message until the digital filter time constant has elapsed. This mode guarantees that the reading is filtered by holding off the display of partially filtered readings.

4-114. Measure Settled (MS). In the MS mode, the front panel display is self triggered and continuously updated. In response to a step change in power of approximately 0.02 dB or an internal range change, the front panel displays the "--------" (dashes) message until the digital filter and settled filter time constants have elapsed. Thus, the effective filter time is twice the default or set filter time constant. This mode guarantees that the reading is filter-settled by holding off the display of partially filtered and unsettled readings.

4-115. Trigger Normal (TN). In this mode, the front panel displays the "trig trig" message until the 4220 is triggered

by a bus command. The instrument continuously measures power as in the measure normal mode but does not display the reading. When triggered, the instrument captures the most recent measurement and displays the reading until another trigger command changes the display. This mode provides a quick response to trigger and the capability to hold a reading until required. However, the user is required to assure stability of the reading at the time of trigger.

4-116. Trigger Filtered (TF). The 4220 displays the most recent measurement until it receives a bus trigger command. The instrument then discards all previous measurements and begins the measure filtered mode. It displays the "trig trig" message until the digital filter time constant has elapsed. The instrument displays and holds the reading until another bus trigger command is received. In this mode, the digital filter guarantees a filtered reading upon trigger and the capability to hold a reading until required.

4-117. Trigger Settled (TS). The 4220 displays the most recent measurement until it receives a bus trigger command. The instrument then discards all previous measurements and begins the measure settled mode. It displays the "trig trig" message until the digital filter and settled filter time constants have elapsed. Thus, the effective filter time is twice the default or set filter time constant. The display then holds the reading until another bus trigger command is received. This mode guarantees a filtered-settled reading upon trigger and the capability to hold a reading until required.

4-118. IEEE PROGRAMMING EXAMPLES.

4-119. The following programming examples demonstrate, bus operation of the 4220. The examples are written in a general format of BASIC and are not an example of any specific implementation of the language. The examples assume that the 4220 is the only instrument connected to the bus so that all commands address the 4220.

4-120. In the examples, "INPUT" refers to the case where the instrument is addressed as the talker; "OUTPUT" indicates that the controller is the talker.

4-121. Example 1. Zero the instrument and take a reading from a signal generator.

Setup conditions	:	Select sensor #3
		Frequency of 5 Gigahertz
		Reading in milliwatts and also dBm
		Filter of 3 seconds
		Generator output is -17 dBm
OUTPUT "SS3"	:	use sensor #3
OUTPUT "FR5"	:	set frequency to 5 GHz
OUTPUT "FL3"	:	set filter to 3 seconds
OUTPUT "TM0"	:	set TALK MODE to "0"

disconnect sensor from generator

WAIT 1000	:	wait one second
OUTPUT "ZR"	:	zero instrument
WAIT 5000	:	wait for zero to complete

reconnect sensor to generator

WAIT 3000	:	the filter time constant
INPUT A,B	:	get reading from 4220
PRINT A	:	print "0" which is the error code
PRINT B	:	print ".01995" which is the power in milliwatts

change talk mode and take another reading in dBm

OUTPUT "TM1"	:	set TALK MODE to "1"
OUTPUT "DB"	:	set 4220 to dBm display
WAIT 3000	:	the filter time constant
INPUT A$	:	get a reading from the 4220
PRINT A$	:	print string variable "0,-17.00dBm"

4-122. Example 2. Take triggered readings from a signal generator.

Setup conditions	:	Select sensor #2
		Power of 100 microwatts
		Frequency of 18 Gigahertz
		Reading in milliwatts
		Autofilter
OUTPUT "SS2"	:	use sensor #2
OUTPUT "FR18"	:	set frequency to 18 GHz
OUTPUT "PW"	:	set WATTS display
OUTPUT "FA"	:	set filter to Autofilter
OUTPUT "TM0"	:	set TALK MODE to "0"
OUTPUT "TS"	:	set Trigger-Settled operation

connect sensor to generator

TRIGGER	:	send bus Group Execute Trigger
INPUT C$	:	get reading from 4220
PRINT C$	:	print "0,100.00E-3" talk mode 0

change to dBm display

OUTPUT "DB"	:	set dBm operation
OUTPUT "TR"	:	send 4220 trigger command
INPUT C$	:	get reading from 4220
PRINT C$	:	print "0, -10.00E0" talk mode 0

change to TALK MODE 1

OUTPUT "TM1":		set Talk Mode 1
TRIGGER	:	send bus Group Execute Trigger
INPUT C$	:	get reading from 4220
PRINT C$	:	print "0,-10.00dBm" talk mode 1

4-123. ERROR MESSAGES.

4-124. The error messages returned over the bus are described in Table 4-6. They are in numerical order as would be sent out over the IEEE-488 bus.

SECTION V
THEORY OF OPERATION

5-1. INTRODUCTION.

5-2. The Model 4220 is an automatic power measurement instrument which uses a microprocessor for instrument control functions. When used with suitable Boonton power sensors, the instrument can measure RF power levels from -70 dBm to +33 dBm over a frequency range of 100 kHz to 110 GHz.

5-3. BASIC BLOCK DIAGRAM.

5-4. The basic internal arrangement of the Model 4220 is shown in Figure 5-1. The RF signal that is to be measured is applied to a power sensor. Various power sensors, both diode and thermal types, can be accommodated by the Model 4220. The power sensor develops a DC voltage that is proportional to the power level of the RF signal. This DC voltage is applied through sensor connector assembly A9 to chopper assembly A7.

5-5. The chopper assembly converts the DC voltage to a balanced square wave AC signal, synchronized to the power line frequency. This AC square wave signal is applied to input assembly A6. The amplitude of this signal can vary from microvolts to volts, depending on the RF level of the signal being measured. Input assembly A6 provides scaling under microprocessor control to accommodate this wide range of signal amplitudes. The applied square wave signal is scaled, amplified, and filtered, and then converted to digital data. The digital data is applied to control assembly A5 for further processing.

5-6. A microprocessor on control assembly A5 is the central control device of the instrument. Operator selected measurement parameters entered through display/keyboard assembly A4, zeroing data, reference levels for dBr measurements, and power sensor calibration data are all stored by the microprocessor. Digital data applied from input assembly

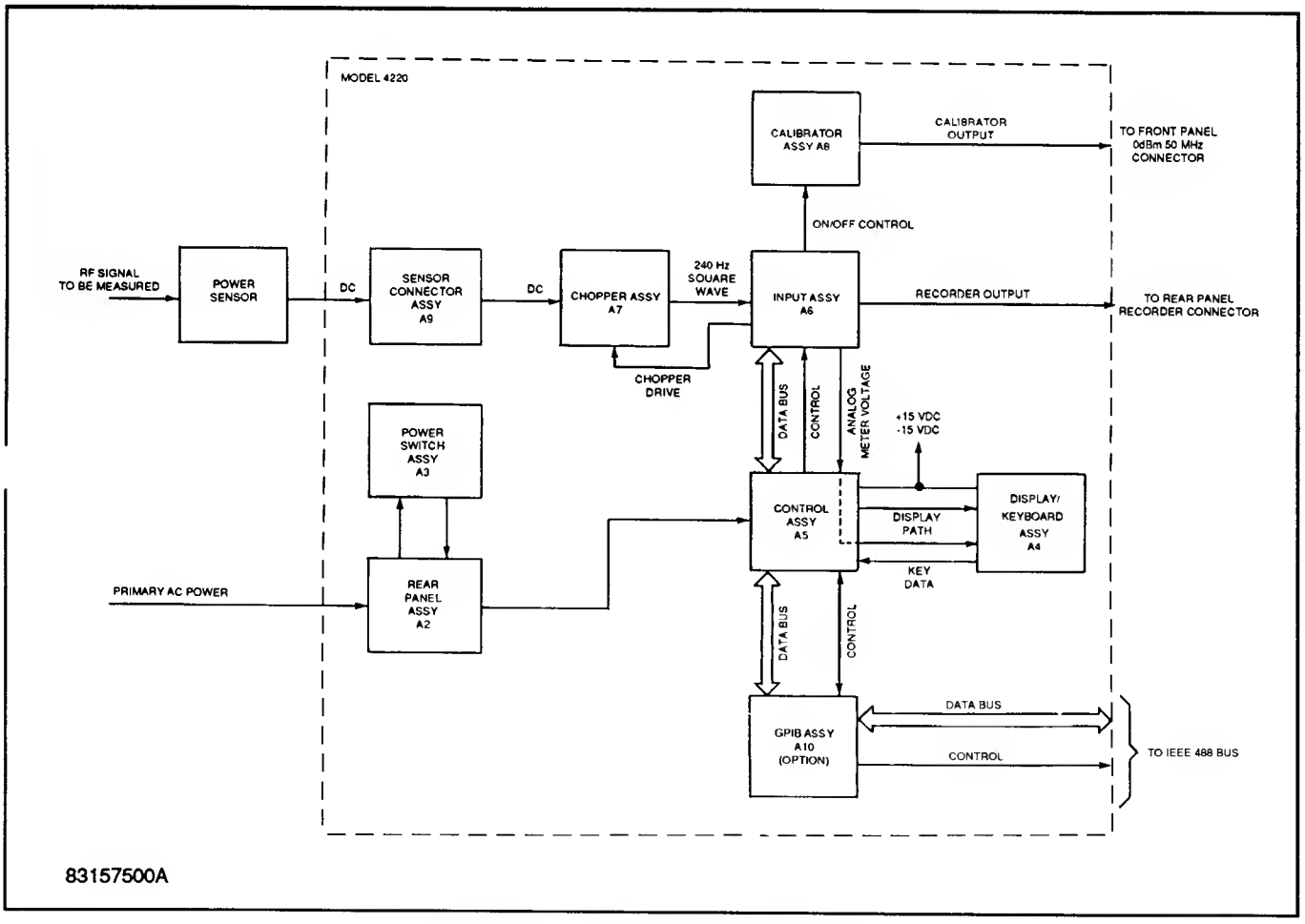

Figure 5-1. Model 4220, Block Diagram

A6 is processed and corrected in accordance with the stored data. Corrected measurement data is applied to display/keyboard assembly A4 for display on the main data display, and to input assembly A6 for conversion to analog signals that drive the front panel analog meter and the rear panel recorder output. The microprocessor also stores software program routines used for zeroing and calibrating the instrument, and for power sensor calibration data selection.

5-7. Control assembly A5 also contains DC power supplies that supply the DC voltages required for operation of the instrument internal circuits. Input AC line voltage is applied to the power supply circuits through rear panel assembly A2 and power switch assembly A3. A tapped power transformer and line voltage selector switches are included on the rear panel assembly to accommodate line voltages of 100, 110, 220, or 240 volts.

5-8. Calibrator assembly A8 develops a 0 dBm, 50 MHz signal for calibration of the instrument. The 50 MHz calibrator can be turned on and off by a key on display/keyboard assembly A4. The 50 MHz calibration signal is available at the front panel 0 dBm 50 MHz connector for application to the power sensor connected to the instrument.

5-9. GPIB assembly A10 is an optional assembly. It can be installed in the instrument to provide interfacing to an IEEE-488 bus for remote bus control of the instrument.

5-10. POWER SENSORS.

5-11. Diode Sensors. Diode sensors contain a pair of non-inductive 100-ohm resistors connected in parallel to present a precision 50-ohm load impedance. An RF voltage is developed across the load resistors when the test signal is applied. This RF voltage is coupled through a DC blocking capacitor to diodes, which rectify the RF voltage to provide a differential DC voltage. At power levels below approximately -20 dBm for sensors without attenuators, the DC voltage is directly proportional to power, and operation is in the square law region of the diodes. Linearity is preserved over many decades of power. Above approximately -10 dBm, the DC voltage is proportional to power squared. To linearize sensor response above -10 dBm, the internal microprocessor calibrates power based on shaping data stored in memory. Resistors and capacitors are used in the DC path of the sensors to optimize sensor characteristics. A typical diode sensor is shown in Figure 5-2.

5-12. Thermal Sensors. Thermal sensors use a thin film, bimetallic resistor both as an RF load and a thermocouple. The thermocouple converts applied RF power to a proportional DC voltage. Sensitivities are on the order of 500 microvolts per milliwatt of power.

5-13. INPUT CIRCUITS. (Figure 5-3)

5-14. Chopper Circuits. The chopper assembly (Figure 8-9) utilizes integrated circuit A7U1, which consists of four solid-state switches, to convert the differential DC voltage developed by the sensor to a square wave AC signal. The switches are sequenced by chopper drive signals M1 and M2 generated by circuits on input assembly A6. Potentiometers A7R1 and A7R2 provide means for cancelling capacitively coupled chopper drive transients, thereby providing a small

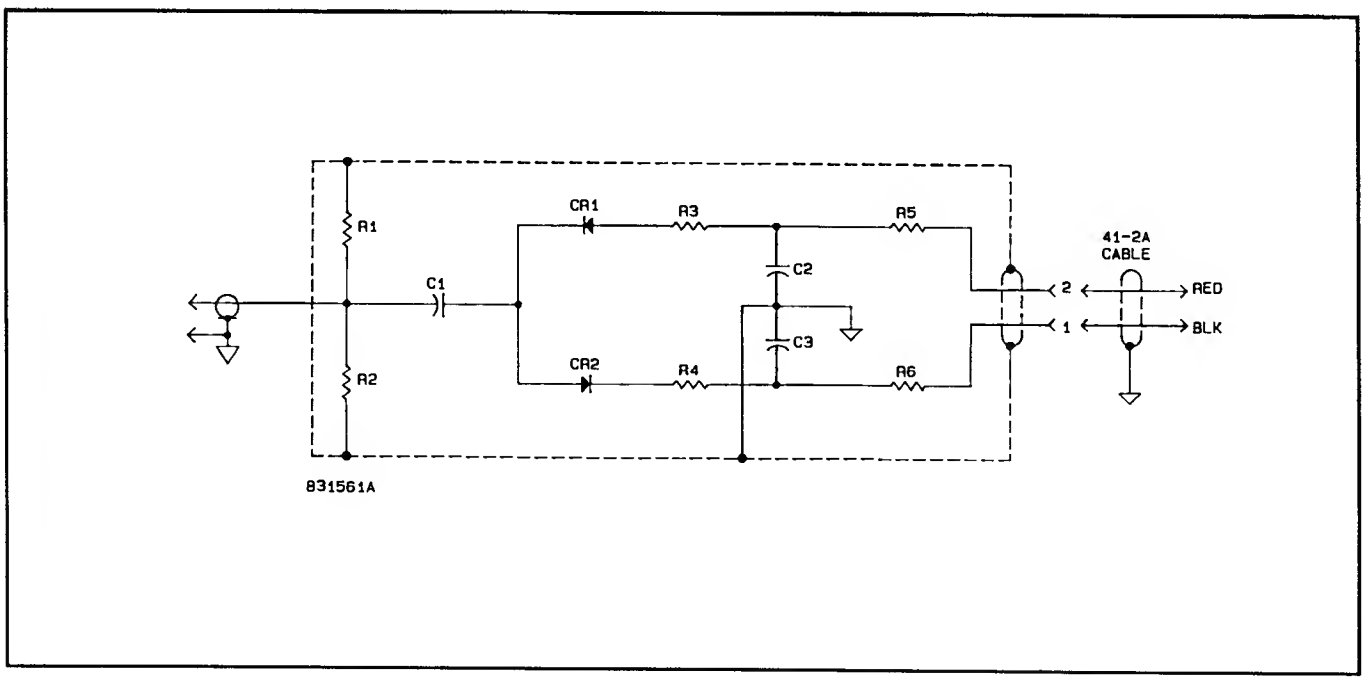

Figure 5-2. Typical Diode Sensor.

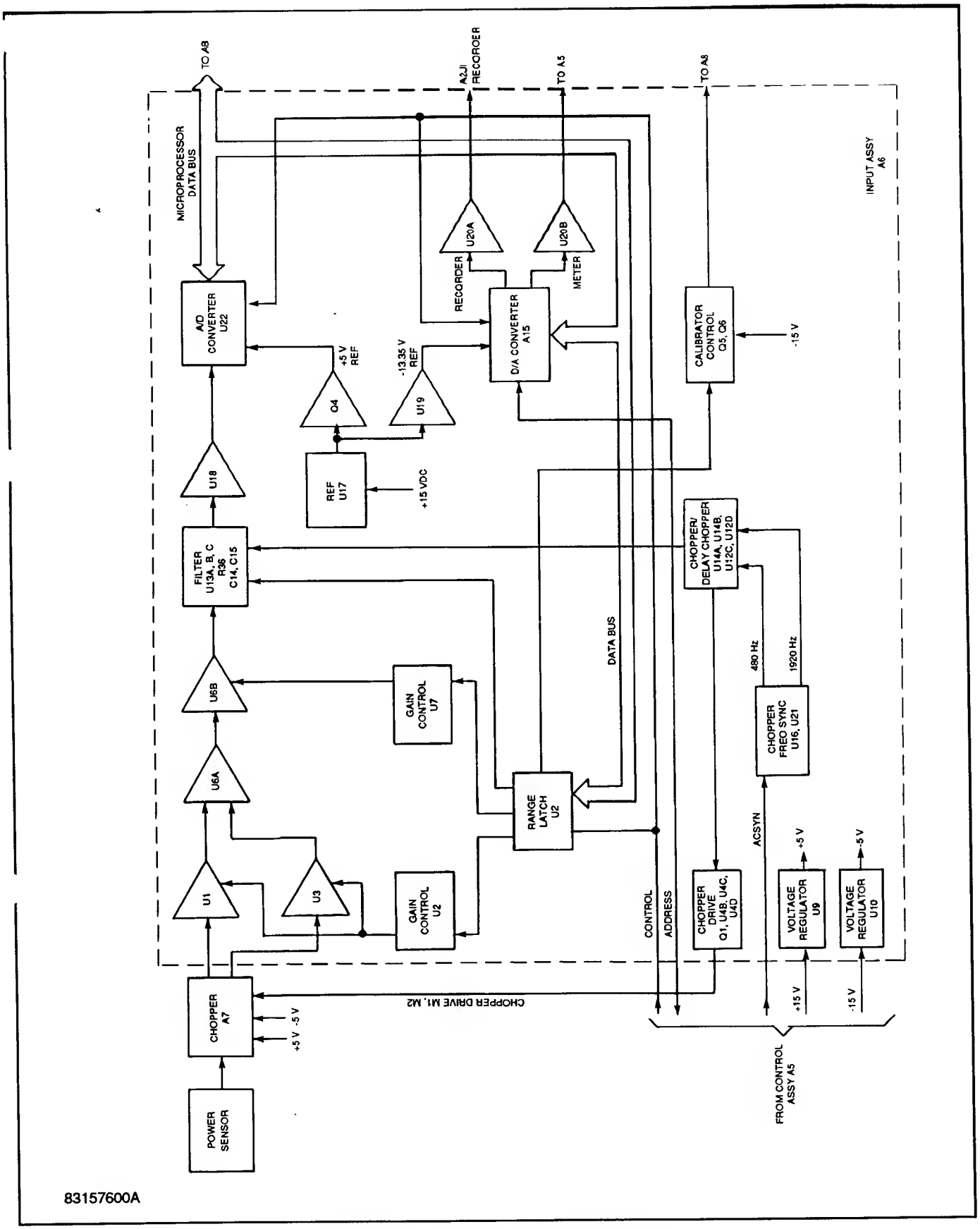

Figure 5-3. Input Circuits, Block Diagram.

TABLE 5-1. INPUT ASSEMBLY SPECIFICATIONS

Range	DC Calibration Input (90% of Full Scale)	Amp. 1 Gain	Amp. 2 Gain	Nominal A/D Input	Nominal A/D Count
0	9 µV	502	165	0.5 V peak	6635
1	90 µV	502	66	2.0 V peak	6635
2	900 µV	100	66	4.0 V peak	6635
3	9 mV	10	66	4.0 V peak	6635
4	90 mV	1	66	4.0 V peak	6635
5	900 mV	1	6.6	4.0 V peak	6635
6	4.5 V	1	1	3.0 V peak	6635

DC offset of less than 1 millivolt. The chopping cycle is synchronized to the AC power line frequency; therefore, any interfering signals in synchronization with the power line will also occur in synchronization with the chopper. In this way, errors originating from the power line can be cancelled when the instrument is zeroed.

5-15. Amplifier Circuits. The balanced AC square wave signal from the chopper circuits is amplified by a precision instrumentation-type input amplifier (Figure 8-7). The input signal is applied to operational amplifiers A6U1 and A6U3, whose gain is controlled by the microprocessor through range latch A6U8, multiplexer switch A6U2, and associated amplifier feedback resistors. The AC output signals of operational amplifiers A6U1 and A6U3 are applied to the differential inputs of amplifier A6U6A, which converts the signal from balanced to single-ended. This signal is amplified by amplifier A6U6B, whose gain is controlled by the microprocessor through range latch A6U8, multiplexer switch A6U7, and associated amplifier feedback resistors. The gain of the amplifiers, the DC calibration values, and the resulting analog-to-digital count of the input assembly circuits are listed in Table 5-1. The DC calibration values are based on the Boonton 2510 DC range calibrator.

5-16. Filter and A/D Conversion Circuits. A synchronous bandpass filter, consisting of resistor A6R36, capacitors A6C14 and A6C15, switches A6U13A, A6U13B, and A6U13C, and amplifier A6U18 (Figure 8-7), is used to condition the AC square wave signal prior to A/D conversion. The filter is a simple RC network, consisting alternately of resistor A6R36 and capacitor A6C14, and resistor A6R36 and capacitor A6C15. Filter switching is under control of switches A6U13A and A6U13B, which are driven synchronously with the chopper drive signals, thereby keeping the positive and negative half cycles of the AC signal directed to a specific filter network. The AC time constant of the filter networks is several chopper cycles long. Operational amplifier A6U18 provides high-impedance buffering between the filter and the A/D converter. Switch A6U13C reduces the time constant of the filter momentarily when ranging to allow faster charging. This switch is also closed momentarily when the instrument is triggered.

5-17. A/D converter A6U22 is synchronized to the chopper AC square wave, and takes a sample about half way through the chopper half cycle. The A/D converter measures the magnitude of the AC square wave at the output of amplifier A6U18 with respect to ground on both half cycles of the waveform, and converts this signal magnitude into equivalent digital data for application to the microprocessor. A signal of approximately ±4.5 volts (9 volts peak to peak) will cause the microprocessor to increment the instrument range to the next higher level when autoranging. On alternate chopper cycles, a voltage approximating one-half the least significant bit of the A/D converter is added into the signal through resistor A6R52. When two or more measurements are averaged in software, an effective A/D conversion resolution of 13 bits is achieved. (A measurement consists of two A/D conversions, each performed during one half of the chopper period.) Integrated circuit A6U17 and transistor A6Q4 provide a precision 5 volt reference for the A/D converter, and diodes A6CR3 and A6CR4 provide input protection for the A/D converter.

5-18. D/A Conversion Circuits. The microprocessor calculates analog meter and recorder output levels based on measured values and the parameters selected by the user. Final measurement data is applied from the microprocessor to D/A converter A6U15 (Figure 8-7) over the data bus, and is loaded into the D/A converter under microprocessor control. The D/A converter is a dual-channel converter which converts the applied digital data into equivalent analog voltages. Output analog voltages are applied through amplifier A6U20A to the recorder output connector on the rear panel of the instrument, and through amplifier A6U20B to the analog meter on display/keyboard assembly A4. The recorder output is a 0 to 13 volt DC level which is proportional to the measured power level in dBm. The analog meter output is a DC voltage whose level is determined by user

selected parameters. For power or dBm measurements, the output voltage is proportional to the measured value shown on the main data display. If dBr measurements are selected, a 0 dBr measurement produces a DC voltage that drives the analog meter to center scale; dBr measurement values above and below the 0 dBr level produce voltages which provide proportional analog meter deflections upscale and downscale, respectively, from the center position. Integrated circuit A6U19 provides a precision -13.35 volt reference for the D/A converter.

5-19. Chopper Drive Circuits. The chopper assembly and the filter circuits on the input assembly are driven by drive signals that are synchronized to the power line frequency. Synchronization to the line aids in the rejection of line produced noise because the noise is repeatable from cycle to cycle and can therefore be zeroed out. Signal ACSYN, developed from the AC line voltage by amplifier A5U11D (Figure 8-5), is applied to a phase-lock loop on the input assembly for synchronization. The phase-lock loop consists of integrated circuits A6U16 and A6U21 (Figure 8-7). The phase-lock loop generates square wave signals at 480 Hz and 1920 Hz, synchronized to the AC power line. At line frequencies of 400 Hz, the output connection at integrated circuit A6U21 must be changed physically to maintain synchronization to the AC line. For 400 Hz operation, cut the circuit trace between terminals E2 and E3 and connect a jumper between E1 and E3. Operation at 50-60 Hz may be restored by disconnecting the jumper between E1 and E3 and reconnecting jumper E2 to E3.

5-20. The 240 Hz chopper drive signals are developed by flip-flop A6U14A, transistor A6Q1, and gates A6U4B, A6U4C, and A6U4D. Low noise DC operating voltages for the switches on the chopper assembly are derived from the +15 volt and -15 volt supplies by voltage regulators A6U9 and A6U10. The 240 Hz chopper signals drive gates A6U12C and A6U12D to provide a delayed 240 Hz square wave drive signals for the filters on the input assembly.

5-21. Other Input Assembly Circuits. Bit switch A6S1 (Figure 8-6) functions with integrated circuit A6U23 to establish instrument test modes for maintenance. Transistors A6Q5 and A6Q6, which are controlled by the microprocessor through one section of range latch A6U8, turn the internal 50 MHz calibrator on and off. Buffer U5, transistor Q2, Q3, and latch U11 are used to obtain serial data calibration information from sensors. (This feature is not currently in use.)

5-22. CONTROL ASSEMBLY. (Figure 5-4)

5-23. General. Operation of the instrument is under control of an eight-bit microprocessor on control assembly A5. Functions performed by the microprocessor include the following:

a. Signal processing (shaping)

b. A/D synchronization

c. Zero detection

d. Zero correction

e. Ranging

f. Calibration

g. Processing of measurement data

h. Power to dB conversion

i. Recorder output processing

j. Keyboard and display control

k. GPIB control (optional)

l. Diagnostics

5-24. Microprocessor Circuits. Integrated circuit A5U1 (Figure 8-5) is the microprocessor CPU. Program instructions that control activity of the instrument are stored in PROM A5U6. RAM A5U8 stores temporary data, and calibration data for the sensors is stored in non-volatile EEPROM A5U12.

5-25. The microprocessor and related circuits are reset on power up by a reset circuit consisting of integrated circuits A5U11A, A5U11B, A5U11C, A5U13B, and A5U13C. When the rectifier circuits on the control board are powered up, signal -RES is active while capacitor A5C18 is charged through resistor A5R14. When the capacitor is charged, signal -RES is set to its inactive state through integrated circuit A5U11C, and the microprocessor begins execution of the stored program. Signal -RES is also activated when either of the two rectifier circuits on the control assembly fail.

5-26. The 5 MHz CPU clock is generated by inverters A5U2A, A5U2B, and A5U2C. Because the microprocessor circuits are much faster than some of the I/O circuits, a separate clock is required for those I/O circuits. The 5 MHz clock frequency is divided by a 4:1 divider, consisting of flip-flops A5U7A and A5U7B, and the 1.25 MHz output clock of the divider is used to clock display controller A5U18 and the A/D converter on input assembly A6.

5-27. Data transfer between the CPU and memory devices is accomplished over an eight-bit data bus. A 16-bit address bus selects memory locations. The address bits also select I/O devices either directly, or through decoding by A5U9A, A5U9B, A5U14, and A5U15. Gates A5U16A, A5U16B, A5U16C, A5U16D, and inverters A5U2E and A5U2F develop control signals under microprocessor control.

5-28. Display/Keyboard Interface Circuits. Operation of the front panel alphanumeric displays is controlled by display controller A5U18 (Figure 8-5). Control signals and display data are applied to the display controller from the microprocessor. The scan and display segment outputs of

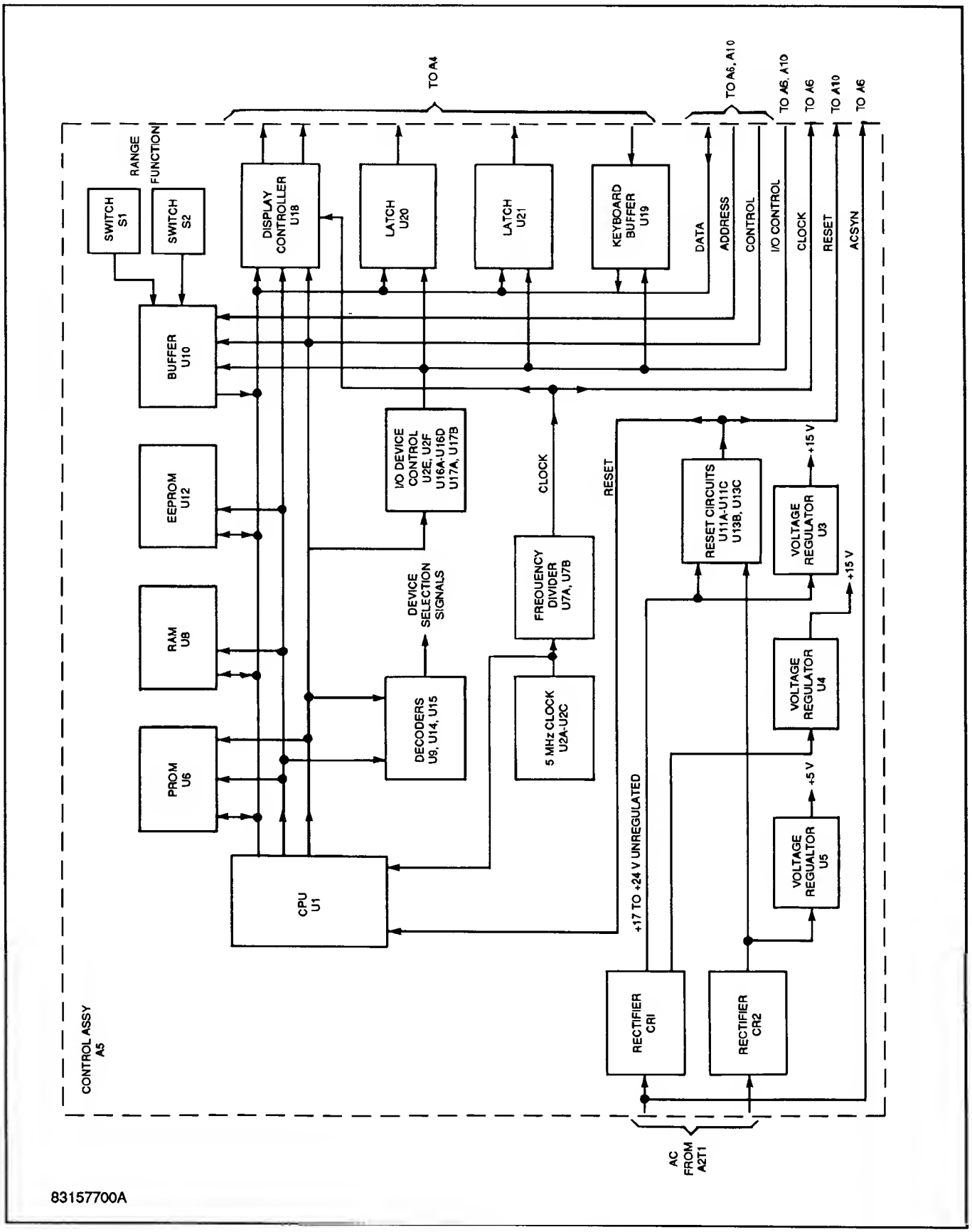

Figure 5-4. Control Assembly, Block Diagram.

the display controller are applied to display/keyboard assembly A4. The scan signals are decoded to select the display digit that is to be activated, and the display segment signals activate the appropriate segments of the selected display digit.

5-29. The front panel annunciators are controlled through latches A5U20 and A5U21. The latches receive data and control signals from the microprocessor. Each latch controls a separate annunciator, and the annunciator is lighted when its light bus signal is set low.

5-30. Front panel key closure data is applied to the microprocessor over the data bus through buffer A5U19. When any front panel key is pressed, it applies a logic low to its corresponding keyboard line. When buffer A5U19 is enabled by the microprocessor control signals, the logic low sets the corresponding data bit on the data bus low, and this low is interpreted by the microprocessor as the corresponding key closure.

5-31. RANGE and FUNCTION Switches. Rotary switches A5S1 and A5S2 (Figure 8-4 and 8-5) are used for instrument calibration. Switch closures cause a logic low to be supplied to the corresponding input of buffer A5U10. When the buffer is enabled by the microprocessor control signals, the logic low at the input of the buffer is transmitted as a logic low bit over the data bus to the microprocessor. Refer to paragraph 6-31 for calibration of the instrument using the RANGE and FUNCTION rotary switches.

5-32. Power Supply Circuits. Secondary AC voltages from power transformer A2T1 (Figure 8-1) are applied to two rectifier circuits on control assembly A5. Rectifier A5CR1 (Figure 8-5) develops a +17 to +24 volt DC unregulated output which is supplied to the reset circuits and to two voltage regulators. Voltage regulator A5U3 develops a +15 volt regulated output, and voltage regulator A5U4 develops a -15 volt regulated ouput. AC voltage from the input of rectifier A5CR1 is also applied to amplifier A5U11D to develop signal ACSYN, which synchronizes the chopper drive circuits on input assembly A6 to the line frequency.

5-33. Rectifier A5CR2 develops a +8 volt to +12 volt DC unregulated output. Voltage regulator A5U5 develops a regulated +5 volt output from this supply. The unregulated output of the regulator is also supplied to the reset circuits.

5-34. DISPLAY/KEYBOARD ASSEMBLY.

5-35. General. Display/keyboard assembly A4 (Figure 8-3) contains the two front panel alphanumeric displays, the LED annunciators, the keys, and the analog meter. Operation of all these components is controlled through circuits on control assembly A5.

5-36. Display Circuits. Segment data is applied in parallel to all nine digits of the front panel alphanumeric displays through buffer A4U1. The digit on which the segment data is to be displayed is selected based on scan signals supplied from the control assembly. The scan signals are decoded by decoder A4U2 to activate the digits sequentially, and the segment data active at the time a digit is active is displayed on that digit. Buffering of the digit selection signals is provided by integrated circuit A4U3.

5-37. Annunciators, Keys, and Analog Meter. The front panel LED annunciators are each controlled by a light bar signal supplied from the control assembly. Each annunciator is lighted when its corresponding light bar signal is set low. Each of the front panel keys supplies a logic low level to its assigned switch line when the key is pressed. The key closure signals are supplied to the control assembly for transmission to the microprocessor. Analog meter A4M1 is driven by a DC signal supplied through the control assembly by a D/A converter on input assembly A6. The analog meter provides an uncalibrated analog readout of displayed measurement values for nulling or peaking operations.

5-38. CALIBRATOR ASSEMBLY. (Figure 5-5)

5-39. Calibrator assembly A8 generates a precision, 0 dBm, 50 MHz signal which can be used to calibrate the instrument. Calibrator on and off is controlled by transistors Q5 and Q6 on control assembly A5. When the calibrator is on, transistor oscillator A8Q1 (Figure 8-11) generates a 50 ±0.75 MHz signal. An automatic leveling circuit is used to maintain a constant 0 dBm output level at the front panel 0 dBm 50 MHz connector. Leveling is achieved by rectifying the oscillator output signal in a signal level detector circuit, and comparing the resulting DC voltage with a stable DC voltage developed by voltage reference A8U1. The difference is amplified by operational amplifier A8AR1, and the output of the operational amplifier controls varactor A8CR3 in a voltage divider that determines the oscillator drive. If the output level of the oscillator tends to rise above or drop below the preset level, the drive to the oscillator is adjusted automatically to maintain a constant output. Capacitors A8C9 and A8C10 divide the oscillator output signal and provides some isolation from the load. Resistor A8R15 is used to establish the 50-ohm source impedance of the calibrator.

5-40. GPIB ASSEMBLY (OPTIONAL).

5-41. Operation of the Model 4220 can be controlled via an IEEE-488 bus for system test applications if the instrument is equipped with the IEEE-488 option. Processing of IEEE-488 bus transactions is performed by bus processor A10U1 (Figure 8-13), which activates an interrupt signal to the microprocessor when bus activity occurs. Chip selection,

read/write function selection, clocking, and reset are controlled by circuits on control assembly A5. Bidirectional data transfers between the microprocessor and the bus processor are handled over the microprocessor data bus.

5-42. Bus management and communications between the bus processor and the IEEE-488 bus controller are handled by bus transceiver A10U3, which is an eight-channel, bidirectional device. Each channel handles a separate bus management or bus transfer control signal. The direction of signal flow is controlled by the logic level applied to the DC and TE input pins by the bus processor. Data bit transfer between the IEEE-488 bus and the bus controller is handled by transceiver A10U2, which is also an eight-channel, bidirectional device. The direction of data transfer is determined by the logic level applied to input pin TE.

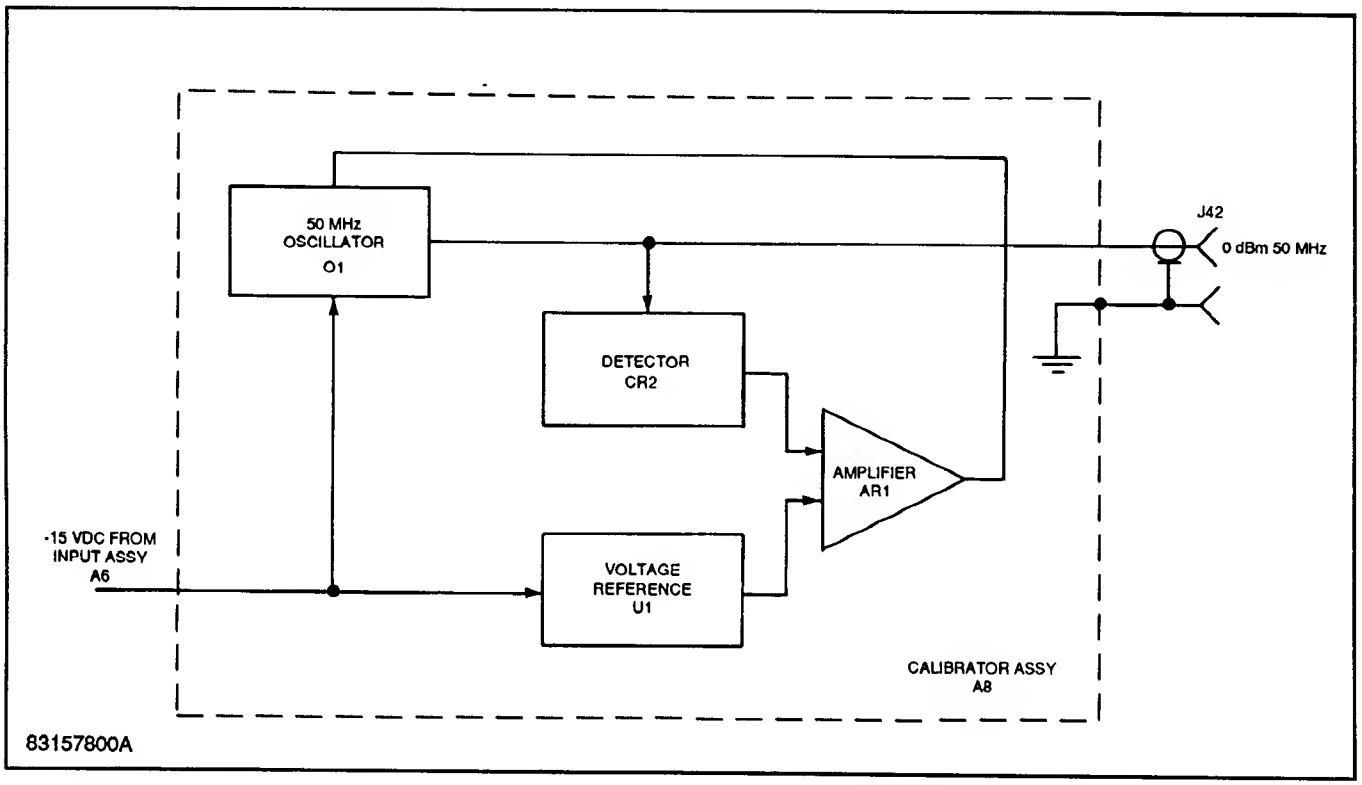

Figure 5-5. 50 MHz Calibrator, Block Diagram

SECTION VI
MAINTENANCE

6-1. INTRODUCTION.

6-2. This section contains maintenance instructions for the Model 4220. Included are a list of test equipment required, troubleshooting procedures designed to localize a malfunction to an individual circuit or component, and alignment procedures for restoring the Model 4220 to proper operating condition after repairs have been completed.

6-3. SAFETY REQUIREMENTS.

6-4. Although the instrument has been designed in accordance with international safety standards, general safety precautions must be observed during all phases of operation, service, and repair of this instrument. Failure to comply with the precautions listed in the Safety Summary at the front of this manual or with specific warnings given throughout this manual could result in serious injury or death. Service and adjustment should be performed only by qualified service personnel.

6-5. TEST EQUIPMENT REQUIRED.

6-6. Test equipment required for test, troubleshooting, and calibration of the Model 4220 is listed in Table 6-1.

6-7. CLEANING PROCEDURE.

6-8. Painted surfaces can be cleaned with a commercial, spray-type window cleaner, or with a mild soap and water solution.

CAUTION

Avoid the use of chemical cleaning agents which might damage the plastics used in the instrument. Recommended cleaning agents are isopropyl alcohol, kelite (1 part kelite to 20 parts water), or a solution of 1% mild detergent and 99% water.

6-9. REMOVAL AND REPLACEMENT.

6-10. Instrument Covers. Remove the instrument covers as follows:

a. Disconnect the power cord and signal cables from the instrument.

b. Remove the two screws along the rear edge of the top cover.

c. Slide the cover to the rear and up.

d. Turn the instrument over and remove the bottom cover in the same manner.

e. To replace the covers, reverse the removal procedure.

6-11. Display/Keyboard Access. To gain access to the display/keyboard, proceed as follows:

a. Remove the instrument covers as described in paragraph 6-10.

b. Remove the screws that attach the front panel of the instrument to the frame.

c. Slide the front panel forward until it clears all switches and connectors, and remove the front panel from the instrument. The display/keyboard will now be accessible.

d. Reverse the removal procedure to install the front panel.

6-12. Other Assemblies. All other assemblies are accessible when the top and bottom covers have been removed. (See Figures 6-1 and 6-2.) Removal and replacement procedures for these assemblies are obvious upon inspection.

6-13. INSPECTION.

6-14. If an equipment malfunction occurs, perform a visual inspection of the Model 4220. Inspect for signs of damage

TABLE 6-1. TEST EQUIPMENT LIST

Item No.	Nomenclature	Model No.
1	Oscilloscope	HP1740A (Hewlett Packard)
2	Digital Multimeter	8840 (Fluke)
3	DC Range Calibrator	2510 (Boonton)
4	Frequency Counter	5740 (Data Precision)
5	Milliwatt Test Set	EPM-1 (Wandel Gultermann)
6	50-ohm Termination	
7	AC Range Calibrator	2520 (Boonton)

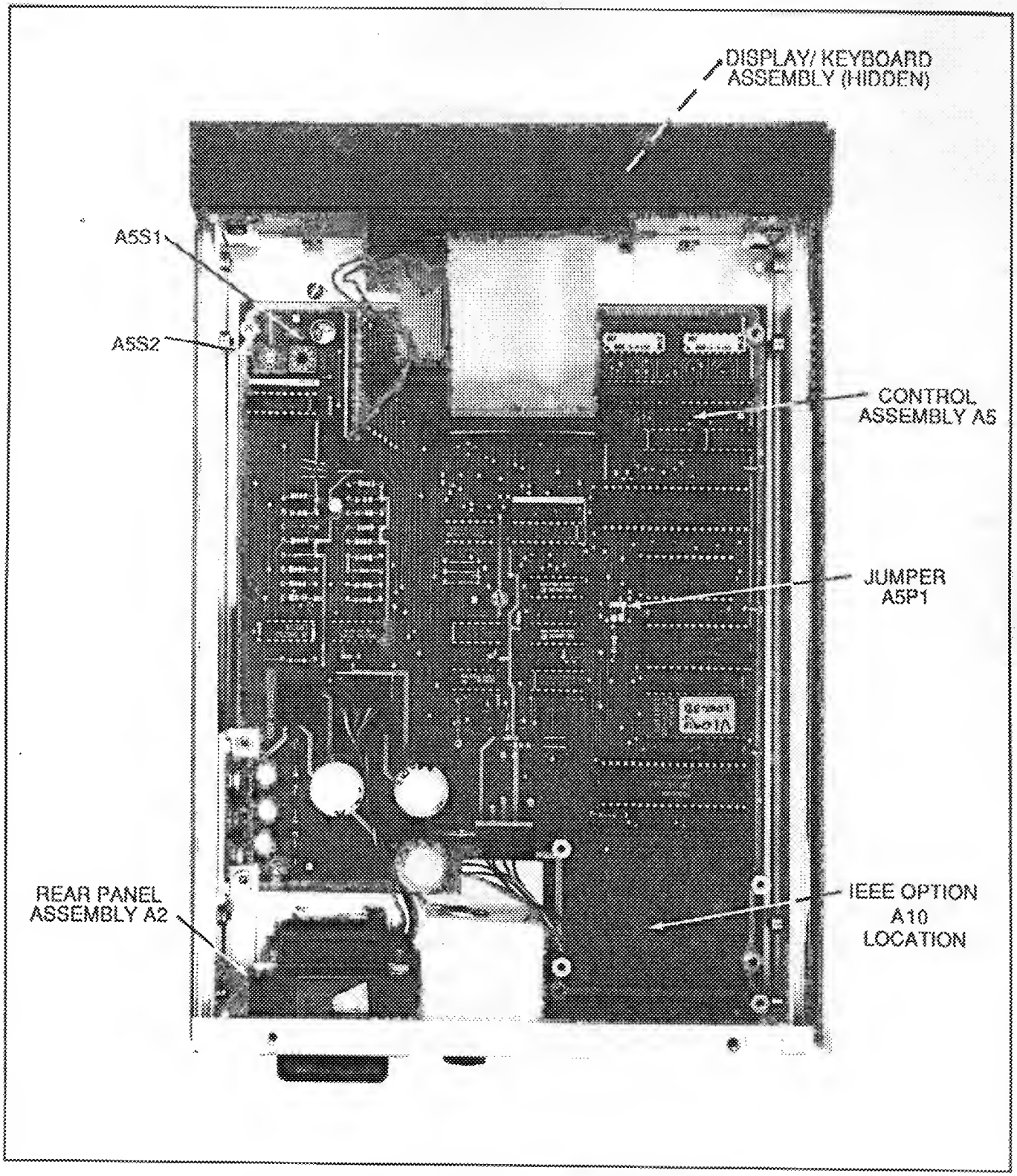

Figure 6-1. Model 4220, Top View with Covers Removed.

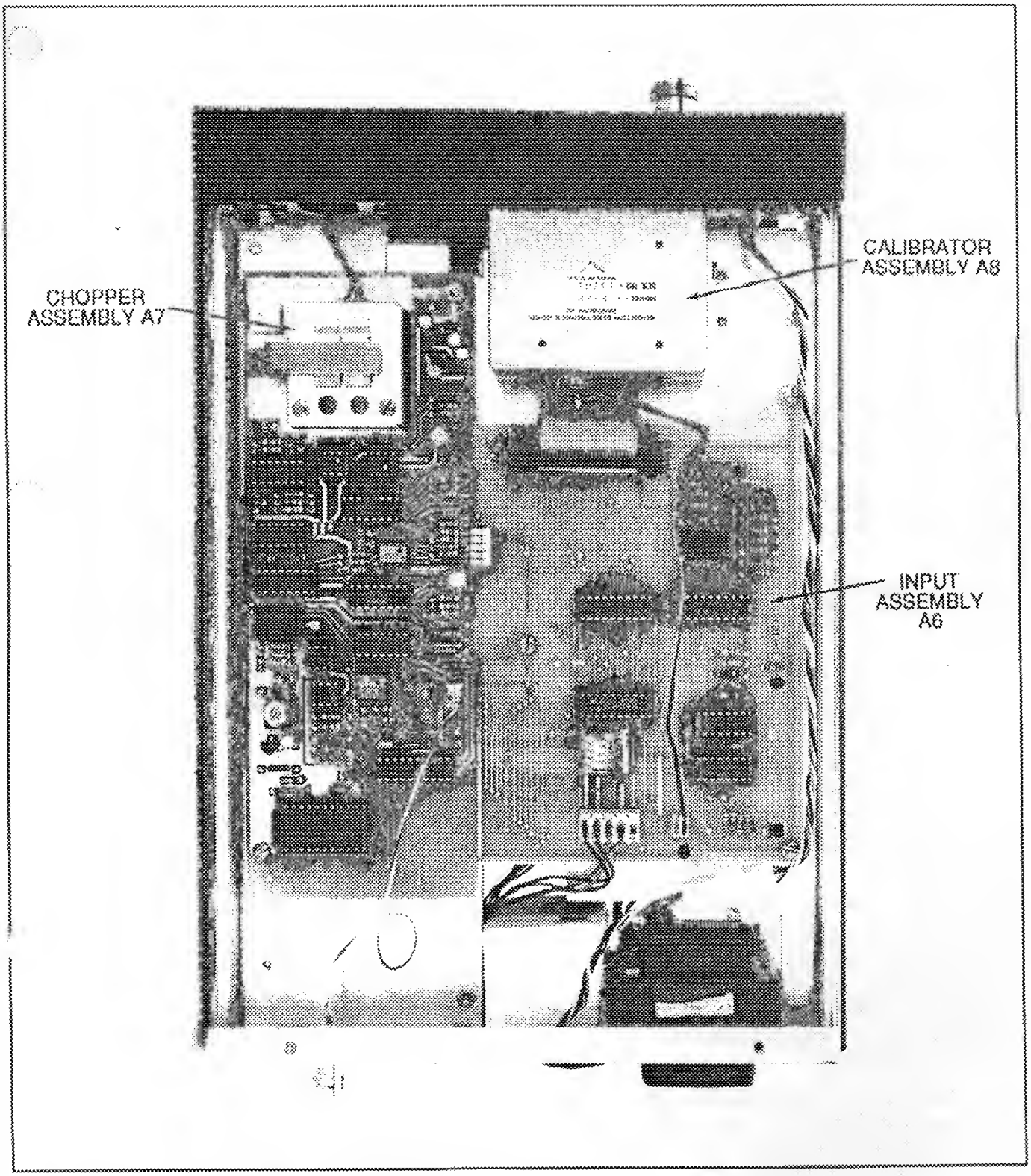

Figure 6-2. Model 4220, Bottom View with Covers Removed.

caused by excessive shock, vibration, or overheating, such as broken wires, loose hardware and parts, loose electrical connections, electrical shorts, cold solder connections, or accumulations of dirt and other foreign matter. Correct any problems discovered, then perform the performance tests to verify that the instrument is operational. If a malfunction persists or the instrument fails any of the performance tests, refer to the troubleshooting procedures. Locate the cause of the malfunction and make required repairs. Then, repeat the performance tests to ensure that the malfunction has been corrected. Finally, calibrate the instrument if any parts have been replaced or if any adjustments have been made.

6-15. PERFORMANCE TESTS.

6-16. Perform the following tests to verify proper instrument operation. If any malfunction occurs, note the symptoms of the malfunction and refer to the troubleshooting procedure (paragraph 6-17) for instructions for localizing the cause of the malfunction.

a. Ensure that the voltage selector switches at the rear of the instrument are set to accommodate the available AC power source.

b. Connect the AC power cord to the power receptacle at the rear of the instrument and to a suitable AC power source.

c. Set the LINE switch to the ON position.

d. Verify that all front panel display segments and all annunciators light momentarily.

e. Verify that "BEC" then is shown on the main data display and a software version number appears on the dB CAL FACTOR display.

f. Verify that the nW, CAL, LINE, and SENSOR 1 annunciators are lighted.

g. Verify that some numerical values are next displayed on the main data display and the dB CAL FACTOR display.

h. Press the SENSOR SELECT key and verify that the sensor 1, 2, 3, and 4 annunciators light in sequence. If sensor calibration data is stored in non-volatile RAM, verify that the sensor serial number and model are displayed while the SENSOR SELECT key is pressed.

i. Press the ENTER/SHIFT key and verify that dashes are shown on the main data display, and "SHft" is shown on the dB CAL FACTOR display. Also verify that all annunciators except the LINE annunciator are off.

j. Press the FILTER/WATTS key and verify that "FIL" is shown on the dB CAL FACTOR display and the numerical value shown on the main data display can be incremented and decremented using the up and down arrow keys, respectively.

k. Press the FREQ/dBm key and verify that "FrE" is shown on the dB CAL FACTOR display and the numerical value shown on the main data display can be incremented and decremented using the up and down arrow keys.

l. Press the RANGE/dBr key and verify that "rg" is shown on the dB CAL FACTOR display and the numerical value shown on the main data display can be incremented and decremented using the up and down arrow keys.

m. Press the SET/LOAD REF key and verify that "SEt" is shown on the dB CAL FACTOR display and the numerical value shown on the main data display can be incremented and decremented using the up and down arrow keys.

n. Press the CAL/PWR REF key and verify that "CAL" is shown on the dB CAL FACTOR display and "rEF" is shown on the main data display.

o. Press the RANGE/dBr key, then press the ENTER/SHIFT key. Verify that the CAL, LINE, and SENSOR 1 annunciators, and one of the watt annunciators, are lighted and some numerical values are displayed on the two displays.

p. Connect the sensor to the front panel SENSOR connector, using the sensor interconnecting cable.

q. Press the ADRS/ZERO key and verify that a series of dashes is shown on the two displays while the instrument performs a zeroing routine. Verify that the displays return to the operating mode when zeroing has been completed.

r. Press the FREQ/dBm key and verify that the dBm annunciator lights.

s. Press the FILTER/WATTS key and verify that one of the watt annunciators lights.

t. Press the RANGE/dBr key and verify that the dBr annunciator lights.

u. Press the SET/LOAD REF key and verify that the main data display reading is zero, the dBr annunciator lights, and the analog meter pointer is centered.

v. Press the FREQ/dBm key and verify that the dBm annunciator is lighted.

w. Check operation of the 50 MHz calibrator as follows:

(1) Verify that the CAL annunciator is lighted. If it is not, press the CAL/PWR REF key to light the annunciator.

(2) Warm up milliwatt test set, Wandel Gultermann Model EPM-1, and the Model 4220 for 30 minutes.

(3) Connect the power head of the milliwatt test set to the input port of the test set.

(4) Connect the RF port of the milliwatt test set power head to the 0 dBm output of the test set.

(5) Follow the manufacturer's instructions for setting up the milliwatt test set. Adjust the front panel potentiometer on the test set to provide a 0 dBm reading on the analog meter.

(6) Disconnect the RF port of the milliwatt test set power head from the 0 dBm output of the test set, and connect it to the 0 dBm 50 MHz connector on the front panel of the Model 4220.

(7) Verify that the reading on the analog meter of the milliwatt test set is 0 ±0.05 dB.

(8) Disconnect the milliwatt test set from the Model 4220.

(9) Connect frequency counter, Data Precision Model 5740, to the 0 dBm 50 MHz connector on the Model 4220, and verify that the frequency is 50 ±0.75 MHz.

(10) Disconnect the frequency counter.

x. Connect the sensor to the 0 dBm 50 MHz connector on the Model 4220.

y. Press the ENTER/SHIFT key to select the shifted functions, press the CAL/PWR REF key, and then press the ENTER/SHIFT key again. Verify that the instrument performs the internal calibration routine, and that the main data display shows 0.00 dBm (plus the dB CAL FACTOR display value) when calibration has been completed.

z. Using the up and down arrow keys, adjust the reading on the dB CAL FACTOR display to 0.00.

aa. Press the FILTER/WATTS key and verify that the main data display shows approximately 1000.0 uW.

ab. Using digital multimeter, Fluke Model 8840, verify that the DC voltage at the rear panel recorder connector is 10 volts ±0.3 V.

ac. Disconnect the sensor from the 0 dB 50 MHz connector.

ad. If the Model 4220 is equipped with the IEEE-488 option, verify that the instrument can be operated over the IEEE-488 bus.

6-17. TROUBLESHOOTING.

WARNING

Read the Safety Summary located at the front of this manual before attempting any of the troubleshooting procedures.

6-18. General. Instrument malfunctions will generally be evident from the front panel indications or, on instruments equipped with the IEEE-488 option, the IEEE 488 bus response. Problems will fall into two general categories: selective failure of one function, or catastrophic failure.

6-19. Selective failure of one function of the instrument will be evident from manipulation of the front panel controls. For example, failure of the analog meter circuits will be evidenced during measurements, but this failure should not interfere with other operating capabilities of the instrument.

6-20. Catastrophic failure, on the other hand, will cause the instrument to be completely inoperative. For example, if the microprocessor was not operating properly, the displays would contain erroneous data and the keys would not be responsive.

6-21. Isolation of the problem requires an understanding of the arrangement of the functional circuits of the instrument. Read the theory of operation in Section V of this manual. The block diagrams in Section V may also prove helpful in troubleshooting the instrument.

6-22. Troubleshooting Chart. Table 6-2 provides a guide for localizing the cause of instrument failure. The table is arranged to support the performance tests of paragraph 6-16. At each point in the troubleshooting chart, it is assumed that none of the preceding symptoms of malfunctions exist. To use the troubleshooting chart, locate the symptoms of malfunction that were noted during the performance test and refer to the "Probable Cause" column for a listing of the instrument circuits that are most likely to be at fault. When applicable, references are included to paragraphs which contain further fault isolation instructions.

NOTE

Before troubleshooting the instrument, remove the covers per paragraph 6-10, and perform a thorough visual inspection per paragraph 6-13.

6-23. FAULT ISOLATION PROCEDURES.

6-24. Power Supply Checks. If a catastrophic failure occurs, check the power supply circuits first. Proceed as follows:

a. Ensure that the AC power cord is properly connected and the rear panel voltage selector switches are set properly.

b. Check the power fuse on the rear panel.

c. Set the LINE switch to the ON position. Using digital multimeter, Fluke Model 8840, ensure that the DC supply voltages at the measurement points listed in Table 6-3 are within the specified limits.

d. If any of the listed voltages are not within the specified limits, remember that problems on other assemblies may affect these voltages. To check this possibility, disconnect connectors A1W3P1 and A4W1P1 from their mating connectors on control assembly A5, and repeat the checks. If the problem does not appear, reconnect the connectors one at a time to see which assembly is causing the problem, and check the DC power circuits on that assembly.

TABLE 6-2. TROUBLESHOOTING CHART

Symptom	Probable Cause
Catastrophic failure; displays, annunciators and keys are inoperative.	a. Power fuse b. Power supply circuits (para. 6-24) c. ICs A5U16, A5U2 d. Microprocessor circuits (para. 6-25)
One or more, but not all, display digits or display digit segments are inoperative.	a. ICs A4U1, A4U2, A4U3, A4R1 b. Affected display digit (A4DS1 through A4DS9) c. ICs A5U18, A5U14
Instrument does not execute initialization routine on turn on; displays and annunciators are fixed in some random pattern.	Microprocessor circuits (para. 6-25)
Instrument displays operate normally, but one or more annunciators are inoperative.	a. ICs A5U20, A5U21, A5U14, A5R22, A5U23 b. Affected annunciator (A4DS10 through A4DS12)
Pressing the (LOCAL)/ SENSOR SELECT key has no effect on sensor selection	a. ICs A5U19, A5U14 b. A4S1 c. Microprocessor circuits (para. 6-25)
Sensor selection can be toggled, but the sensor serial number and model are not displayed.	a. High frequency cal factors have not been stored in the instrument (no fault) b. Microprocessor circuits (para. 6-25)
One or more shifted function displays are not obtained when the shifted function keys are pressed.	a. A4S2 b. IC A5U19 c. Microprocessor circuits (para. 6-25)
Shifted function keys operate normally, but one or more keys malfunction in the operating mode.	Microprocessor circuits (para. 6-25)
The instrument will not zero properly.	a. RF signal applied to the sensor (remove) b. Microprocessor circuits (para. 6-25)
The 50 MHz calibrator provides no output.	a. Ensure that the CAL annunciator is lighted. b. ICs A6U8 and A6U12B, and transistors A6Q5 and A6Q6 c. 50 MHz calibrator (para. 6-28)
The instrument does not calibrate properly.	a. Sensor b. Chopper assembly (para.6-26) c. Input assembly (para. 6-27) d. IC A5U14
No DC voltage, or incorrect voltage, is measured at the recorder output connector; operation is normal otherwise.	a. ICs A6U15, A6U20A, A5U14 b. ICs A6U17 and A6U19, transistor A6Q4

TABLE 6-2. TROUBLESHOOTING CHART (Cont.)

Symptom	Probable Cause
The analog meter is inoperative or inaccurate.	a. ICs A6U15, A6U20B b. Instrument out of calibration
On instruments with IEEE-488 option, local operation is normal, but the instrument cannot be operated over the bus.	a. Loose connection at rear panel IEEE 488 connector b. ICs A10U1, A10U2, A10U3 c. IC A5U15

TABLE 6-3. POWER SUPPLY CHECKS

Measurement Points	DC Voltage
A5TP1 to A5TP2 (ground)	+15.00 ±0.75
A5TP3 to A5TP2 (ground)	-15.00 ±0.75
A5TP4 to A5TP2 (ground)	+5.00 ±0.25

e. If the problem persists after the connectors are disconnected, locate the problem as follows:

(1) If all DC supply voltages are affected, check transformer A2T1, power switch assembly A3, and related circuit components.

(2) If only the +15 and -15 volt supplies are affected, check rectifier A5CR1 and related circuit components.

(3) If only the -15 volt supply is affected, check voltage regulator A5U4 and related circuit components.

(4) If only the +15 volt supply is affected, check voltage regulator A5U3 and related circuit components.

(5) If only the +5 volt supply is affected, check rectifier A5CR2, voltage regulator A5U5, and related circuit components.

f. The DC voltages for the chopper circuits are provided by supplies on input assembly A6. These voltages should also be checked as follows:

(1) Using digital multimeter, Fluke Model 8840, check that +5 volts DC is available between test points A6TP3 and A6TP6 (ground).

(2) Using the digital multimeter, check that -5 volts DC is available between test points A6TP4 and A6TP6 (ground).

6-25. Microprocessor Checks. Location of faults in the microprocessor circuits can be a complex task. Many of the signals associated with the microprocessor, such as data and address, are dependent upon asynchronous external stimulation or software routines which vary with application. The microprocessor encompasses circuits that include PROM, RAM, clock, and timing, failure of any of which may cause catastrophic failure. The following checks can be used for localizing microprocessor problems:

a. Using oscilloscope, Hewlett Packard Model HP1740A or equivalent, check for a 5 MHz clock signal at pin 3 of IC A5U7. If no signal is observed, check IC A5U2 and related circuit components.

b. Using the oscilloscope, check for a 1.25 MHz clock signal at pin 13 of IC A5U7. If no signal is observed, check IC A5U7.

c. Using the oscilloscope, check for a logic high level at test point A5TP5. If the logic level is low, check ICs A5U11 and A5U13 and related circuit components.

d. Using the oscilloscope, check for activity on the address lines (pins 30 through 40 and 1 through 5 of IC A5U1). If no activity is noted, replace IC A5U1.

e. Using the oscilloscope, check for activity on the data lines (pins 7 through 10 and 12 through 15 of IC A5U1). If no activity is noted, check PROM A5U6 and related circuit components.

f. Using the oscilloscope, check for activity on pins 19 and 20 of IC A5U1. If no activity is noted, replace IC A5U1.

g. Using the oscilloscope, check for a logic low on one of the output lines of ICs A5U14 and A5U15. If all output lines are high, check the ICs by replacement.

h. Check ICs A5U8, A5U9, and A5U12 by replacement.

6-26. Chopper Circuit Check. If the chopper circuits are suspected of malfunctioning, proceed as follows:

a. Using digital multimeter, Fluke Model 8840 or equivalent, ensure that +5 volts DC is available between test

points A6TP3 and A6TP6 (ground), and -5 volts DC is available between test points A6TP4 and A6TP6 (ground). If either voltage is incorrect, check the related voltage regulator (A6U9 or A6U10) and related circuit components on the input assembly.

b. Using an oscilloscope, ensure that a 240 (or 200) Hz square wave chopper drive signal is available at pins 11 and 10 of IC A6U4. If the drive signal is not present, check ICs A6U4, A6U14A, A6U16, and A6U21 and related circuit components on the input assembly. Nominal drive level signals are 10 volts peak to peak.

NOTE

240 Hz is nominal for 60 Hz line frequency. 200 Hz is nominal for 50 Hz line frequency, or if jumper connection A6E1 to A6E3 is made for 400 Hz line frequency.

c. Connect DC range calibrator, Boonton Model 2510, to the front panel SENSOR connector. Set the DC range calibrator to range 0 and the source impedance to 500K.

d. Using the oscilloscope, verify that a 240 or 200 Hz square wave signal is present at pin 3 of IC A6U1 and at pin 3 of IC A6U3. If the signal is not present, check IC A7U1 and related circuit components on the chopper assembly.

6-27. Input Assembly Checks. To check operation of the input assembly, proceed as follows:

a. Connect DC range calibrator, Boonton Model 2510, to the front panel SENSOR connector.

b. Using the front panel keys, set the Model 4220 to the autorange mode.

c. Set the DC range calibrator to range 0 and the source impedance to 500K.

d. Using oscilloscope, check the signal at test point A6TP1. The signal should be a 240 (or 200) Hz square wave signal with a 6.5 millivolt peak to peak amplitude. If the signal is not as specified, check ICs A6U1, A6U2, A6U3, and A6U6A and related circuit components.

e. Using the oscilloscope, check the signal at test point A6TP2. The signal should be a 240 (or 200) Hz square wave with a 1.1 volt peak to peak amplitude. If the signal is not as specified, check ICs A6U6B and A6U7 and related circuit components.

f. Using the oscilloscope, check the signal at test point A6TP11. The signal should be a 240 (or 200) Hz square wave with a 1.0 volt peak to peak amplitude. If the signal is not as specified, check IC A6U18 and related circuit components.

g. Repeat steps d through f for ranges 1 through 6B of the DC range calibrator. The signal amplitudes should be as follows (nominal ±10%):

Range	A6TP1	A6TP2	A6TP11
1	65.2 mV	4.30 V	4.10 V
2	130.0 mV	8.60 V	8.20 V
3	130.0 mV	8.60 V	8.20 V
4	130.0 mV	8.60 V	8.20 V
5	1.30 V	8.60 V	8.20 V
6B	6.48 V	6.48 V	6.06 V

Upranging should be smooth and automatic. If incorrect levels are noted for any measurement, check ICs A6U2, A6U7, A6U8, and A6U12 and related circuit components.

h. Set the DC range calibrator to range 0. Using the front panel controls, set the Model 4220 to range 0.

i. Monitor the signal at test point A6TP11 with the oscilloscope. Synchronize the oscilloscope to test point A6TP8 or "line". The signal should be a square wave at 240 (or 200) Hz. The first 1/8 of each half cycle will have more noise than the remainder of the half cycle. If the waveform does not appear normal, check ICs A6U14, A6U12, and A6U13, capacitors A6C14 and A6C15, and related circuit components.

j. Using the digital multimeter, verify that the DC voltage at test point A6TP10 is 5.00 ±0.02 V. If the voltage is incorrect, check IC A6U17, transistor A6Q4, and related circuit components.

k. Using the digital multimeter, verify that the DC voltage at test point A6TP12 is -13.35 ±0.25 V. If the voltage is incorrect, check IC A6U19 and related circuit components.

l. If all preceding steps provide the correct results but the input assembly still malfunctions, check ICs A6U22 and A6U15 and related circuit components.

6-28. 50 MHz Calibrator Checks. If the 50 MHz calibrator malfunctions, locate the problem as follows:

a. Using the digital multimeter, ensure that the voltage between the orange and black (ground) wires is -15 volts when the front panel "CAL" annunciator is on. If the voltage is incorrect, check transistors A6Q5 and A6Q5 and related circuit components on the input assembly. If correct, remove power from 4220.

b. Remove the 50 MHz calibrator mounting hardware, and remove the 50 MHz calibrator from the instrument. Leave the black and orange wires connected.

c. Connect a 50-ohm termination to the output connector of the 50 MHz calibrator.

d. Turn on the instrument and turn on the 50 MHz calibrator (CAL annunciator lit).

e. Using the digital multimeter, check the DC voltage at in 3 of IC A8AR1. The voltage should be approximately - 4 volts. If the voltage is incorrect and cannot be adjusted to the proper value with potentiometer A8R4, check IC A8U1 and related circuit components.

f. Using oscilloscope, check the signal amplitude at the junction of resistor A8R15 and capacitor A8C9. The signal amplitude should be 1.2 +/-0.4 volts peak to peak. If the signal amplitude is high, check IC A8AR1 and related circuit components. If the voltage is low, the 50 MHz calibrator may require adjustment. If there is no signal, check transistor A8Q1 and related circuit components.

g. Using the frequency counter, measure the signal frequency at the output connector. The frequency should be 50 ±0.75 MHz. If the frequency is incorrect, the 50 MHz calibrator requires adjustment.

6-29. ADJUSTMENT.

6-30. After any repairs have been made to the 50 MHz calibrator, it may require adjustment. All other assemblies are adjusted during the calibration procedure. To adjust the 50 MHz calibrator, proceed as follows:

a. Connect the power head of Milliwatt Test Set, Wandel Goltermann Model EPM-1, to the input port of the test set. Connect the RF port of the power head to the 0 dBm input on the test set.

b. Follow the manufacturer's instructions for setting up the milliwatt test set as necessary.

c. Adjust the front panel potentiometer on the milliwatt test set for a 0 dBm indication on the test set analog meter.

d. Disconnect the RF port of the milliwatt test set power head from the input port of the test set, and connect it to the 50 MHz calibrator output connector.

e. Adjust potentiometer A8R4 on the 50 MHz calibrator for a 0 dBm indication on the analog meter of the milliwatt test set.

f. Disconnect the milliwatt test set and connect frequency counter, to the 50 MHz calibrator output connector.

g. Measure the frequency. The frequency should be 50 ±0.75 MHz.

NOTE

Perform steps j through l only if the power level or the output frequency is incorrect.

h. Turn off the Model 4220. Remove the attaching hardware of the 50 MHz calibrator and remove this assembly from the instrument. Leave the black and orange wires connected.

i. Turn on the instrument and turn on the 50 MHz calibrator (CAL annunciator lit). Turn on the milliwatt test set. Allow the equipment to warm up for 30 minutes.

j. Connect a digital multimeter to pin 3 of IC A8AR1. Adjust potentiometer A8R4 to provide a -4 volt DC reading on the digital multimeter.

k. Monitor the signal level at the junction of resistor A8R15 and inductor A8L3 with an oscilloscope. Adjust capacitors A8C4 and A8C12 for a 600 millivolt peak to peak indication on the oscilloscope at 50 MHz. (The capacitors may be interacting.)

l. Repeat steps c through g.

m. Turn off the instrument. Disconnect the test equipment and install the 50 MHz calibrator in the instrument.

6-31. CALIBRATION.

6-32. General. The Model 4220 may be calibrated manually using internal FUNCTION and RANGE switches A5S2 and A5S1, respectively. (Figure 6-1) (If the instrument is equipped with the IEEE-488 option, calibration can also be performed automatically over the bus.) Calibration data that is to be entered may be obtained from the Sensor Calibration Data Sheet that accompanies the instrument. A maximum of four sets of sensor data may be entered.

6-33. Preliminary Steps. Before proceeding with calibration, perform the following steps:

a. Remove the top and bottom covers from the instrument.

b. Set RANGE switch A5S1 and FUNCTION switch A5S2 to position 0 (Figure 6-3).

c. Connect the AC line cord of the instrument to a suitable AC power source. Set the LINE switch to the ON position.

d. Verify that the instrument performs the initialization routine (steps d through g, paragraph 6-16).

e. Perform a power supply check in accordance with step c of paragraph 6-24.

f. Set the LINE switch to the OFF position. Set FUNCTION switch A5S2 to any position other than position 0.

g. Position jumper A5P1 (Figure 6-1) to connect pins 1 and 2 of connector A5J5 together.

h. Set the LINE switch to the ON position and allow the instrument to stabilize for at least 15 minutes.

NOTE

The procedures covered in paragraphs 6-34b through 6-34f, which load sensor dependent constants, may be performed during the warmup period.

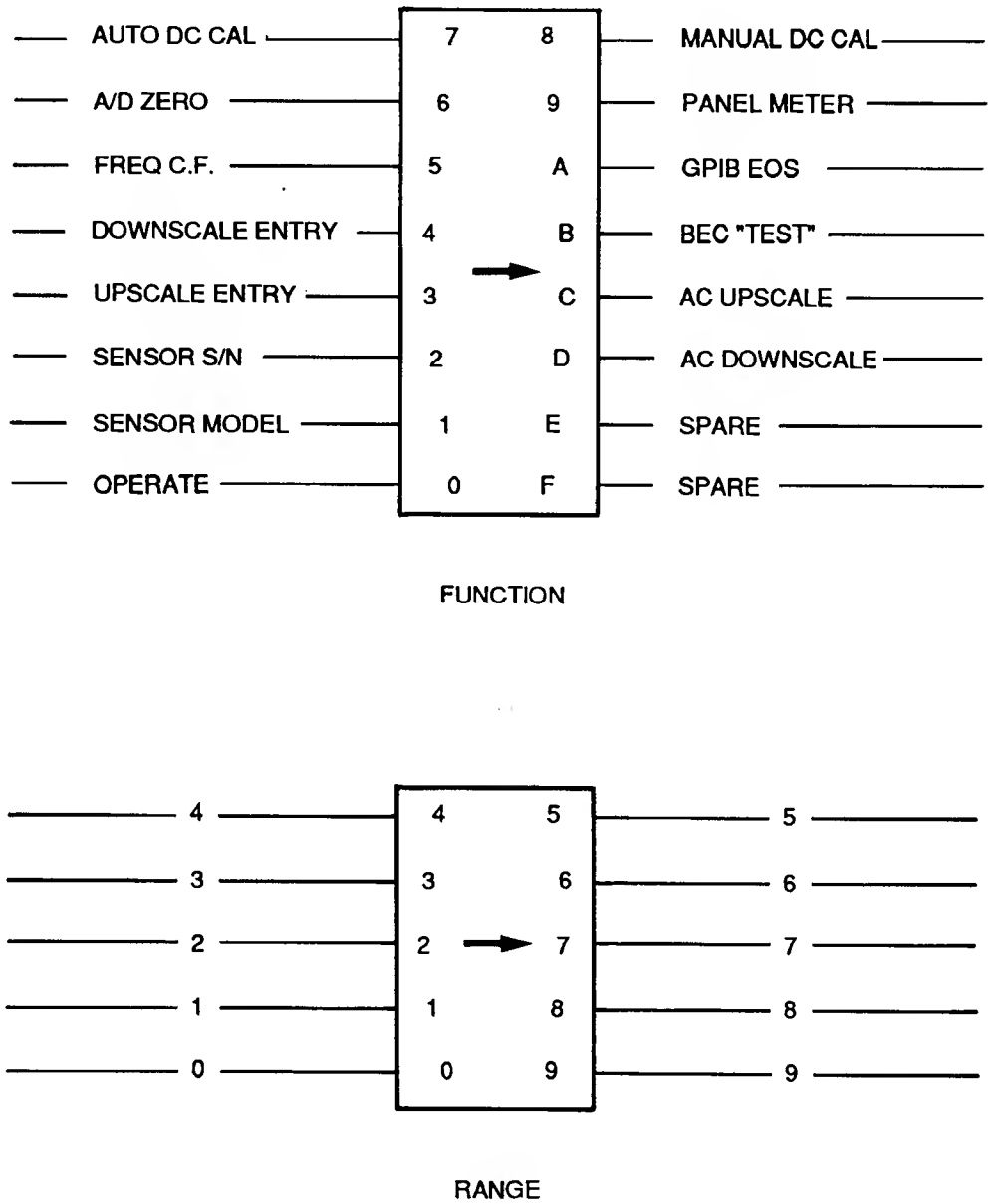

Figure 6-3. FUNCTION and RANGE Rotary Switch Positions

6-34. Manual Calibration.

a. Chopper Adjustment. Adjust the chopper as follows:

(1) Connect DC range calibrator, Boonton Model 2510, to the SENSOR connector.

(2) Set the DC range calibrator to range 0, the source resistance to 500K ohms, and the output to off.

(3) Connect oscilloscope, Hewlett Packard Model 1740A, to test point A6TP11 on the input assembly. Set the oscilloscope for 200 mV/division.

(4) While observing the oscilloscope display, adjust potentiometers A7R1 and A7R2 in equal but opposite increments for a minimum square wave output indication (e.g., for best straight line).

(5) Adjust tilt potentiometer A6R2 on the input assembly for a minimum amplitude of equal positive and negative excursions (best square-wave).

(6) Disconnect the oscilloscope.

b. Sensor Model Number. Enter the sensor model number as follows:

(1) Set FUNCTION switch A5S2 to position 1 (sensor Model).

(2) Using the front panel SENSOR SELECT key, select sensor 1.

(3) Using the front panel up and down arrow keys, scroll through the menu of sensor models until the displayed sensor number corresponds with the last three digits of the model number given on the Sensor Calibration Data Sheet.

(4) Press the front panel LOAD REF key.

c. Sensor Serial Number. Enter the sensor serial number as follows:

(1) Set FUNCTION switch A5S2 to position 2 (sensor S/N) (Figure 6-3).

(2) Using the front panel up and down arrow keys, increment or decrement the value shown on the dB CAL FACTOR display until this value corresponds to the last four digits of the sensor serial number given on the Sensor Calibration Data Sheet.

(3) Press the front panel LOAD REF key.

d. Upscale Entry. Enter sensor upscale gain constants as follows:

(1) Set FUNCTION switch A5S2 to position 3 (upscale entry) (Figure 6-3).

(2) Set RANGE switch A5S1 to position 0, which corresponds to range 0.

(3) Using the front panel up and down arrow keys, adjust the value shown on the dB CAL FUNCTION display to correspond with the upscale gain constant for range 0, as listed on the Sensor Calibration Data Sheet.

(4) Enter this value by pressing the LOAD REF key.

(5) Set RANGE switch A5S1 to position 1 and repeat steps (3) and (4), except use the upscale gain constant values given for range 1 on the Sensor Calibration Data Sheet.

(6) Set RANGE switch A5S1 to positions 2 through 6 in sequence, and enter the upscale gain constant values given for the corresponding ranges on the Sensor Calibration Data Sheet in the same manner.

e. Downscale Entry. Enter sensor downscale gain constants as follows:

(1) Set FUNCTION switch A5S2 to position 4 (downscale entry) (Figure 6-3).

(2) Set RANGE switch A5S1 to position 0, which corresponds to range 0.

(3) Using the front panel up and down arrow keys, adjust the value shown on the dB CAL FACTOR display to correspond with the downscale gain constant for range 0, as listed on the Sensor Calibration Data Sheet.

(4) Enter this value by pressing the LOAD REF key.

(5) Set RANGE switch S5S1 to position 1 and repeat steps (3) and (4), except use the downscale gain constant value given for range 1 on the Sensor Calibration Data Sheet.

(6) Set RANGE switch A5S1 to positions 2 through 6 in succession and enter the downscale gain constant value given for the corresponding ranges on the Sensor Calibration Data Sheet in the same manner.

f. Frequency Cal Factors. In order to select a frequency and enter cal factor data for that frequency selection, the front panel up and down arrow keys must change between function incrementing and data incrementing. A blinking decimal point indicates which field is attached to the up and down arrow keys. When the decimal point is blinking in the dB CAL FACTOR display, the up and down arrow keys will scroll through 36 table values (tables 00 through 35) for frequencies and cal factors. The frequency cal factor mode is initiated with FR.00 on the dB CAL FACTOR display and 00.00 (or any frequency value previously assigned to table 00) on the main data display. Pressing the LOAD REF key changes the blinking decimal point to the main data display, indicating that the up and down arrow keys are attached to the data field and will increment the assigned frequency of

table 00. To enter frequency cal factors, proceed as follows:

(1) Set FUNCTION switch A5S2 to position 5 (frequency cal factor) (Figure 6-3).

(2) If the decimal point in the dB CAL FACTOR display is not blinking, press the LOAD REF key.

(3) Using the up and down arrow keys, scroll the dB CAL FACTOR display until the display shows FR.00.

(4) Press the LOAD REF key. The blinking decimal point will shift to the main data display.

(5) Using the up and down arrow keys, scroll the main data display until a frequency value of 00.00 is shown.

NOTE

For table 00, a frequency value of 0.00 GHZ is entered for initial calibration, although the Sensor Calibration Data Sheet may list a frequency of 0.03 GHz.

(6) Press the LOAD REF key. The dB CAL FACTOR display will increment to CF.00, with the up and down arrow keys still attached to the main data display, as indicated by a blinking decimal point on the display.

(7) Press the LOAD REF key. This will cause a value of 0.00 dB to be assigned to frequency 00.00.

(8) The table number will be incremented automatically to the next assignable table number, and the up down arrow keys will be attached to the dB CAL FACTOR display area, as indicated by a blinking decimal point in this display.

(9) Repeat steps (4) through (7), except enter the frequency values and cal factors listed on the Sensor Calibration Data Sheet for table 01.

(10) Using the same procedures, enter the frequencies and cal factors for all the table numbers as given on the Sensor Calibration Data Sheet.

NOTE

If calibration data for more than one sensor is to be loaded into the instrument, select the appropriate sensor number for each sensor using the SENSOR SELECT key, and repeat steps b through f for that sensor.

g. A/D Zero Correction. Enter the A/D zero correction as follows:

(1) Set FUNCTION switch A5S2 to position 6 (A/D zero) (Figure 6-3).

(2) Connect DC range calibrator, Boonton Model 2510, to the front panel SENSOR connector.

(3) Set the DC range calibrator to range 5, the source resistance to 500K ohms, and the output to on.

(4) The dB CAL FACTOR display should show a value of approximately 6635. Press the LOAD REF key.

(5) Change the DC range calibrator to range 4.

(6) The dB CAL FACTOR display should show a value of approximately 664. Press the LOAD REF key.

(7) The main data display will now show the zero correction value (nominally 0000 $\pm$10).

h. Automatic DC Constants. To enter DC calibration constants, proceed as follows:

(1) Set FUNCTION switch A5S2 to position 7 (Auto DC cal) (Figure 6-3) and RANGE switch A5S1 to position 0.

(2) Connect DC range calibrator, Boonton Model 2510, to the front panel SENSOR connector.

(3) Set the DC range calibrator to range 0, the source resistance to 500K ohms, and the output to off.

(4) Press the front panel ZERO key. The Model 4220 will perform the zeroing routine. After zeroing has been completed, the dB CAL FACTOR display should show a value of approximately 5000, and the main data display should show a value near 0000.

(5) Set the DC range calibrator output to on. The main data display of the Model 4220 should show a value of approximately 6635.

(6) Press the LOAD REF key.

(7) Change the DC range calibrator to range 1 and range switch A5S1 to position 1. Allow the main data display reading to settle, then press the LOAD REF key.

(8) Continue changing the DC range calibrator ranges and corresponding positions of RANGE switch A5S1 and pressing the LOAD REF key in the same manner until DC constants for ranges 2, 3, 4, 5, and 6B of the DC range calibrator have been entered.

i. Manual DC Calibration. This procedure is an alternate for the automatic DC calibration procedure of step h, above. Position 8 of FUNCTION switch A5S2 is provided as a means for entering DC constants through the front panel up and down arrow keys when a DC range calibrator is not available. The DC calibration values are supplied as calibra-

tion information with the instrument. To enter the DC calibration values, proceed as follows:

(1) Set FUNCTION switch A5S2 to position 8 (manual DC cal) (Figure 6-3).

(2) Set RANGE switch A5S1 to position 0.

(3) Using the up and down arrow keys, increment or decrement the value shown on the dB CAL FACTOR display until the display shows the DC calibration value for range 0, as listed on the instrument calibration data sheet supplied in the inside top cover pouch.

(4) Press the LOAD REF key.

(5) Set RANGE switch A5S1 to positions 1 through 6 in sequence, and enter the corresponding DC calibration value for each range, as indicated on the instrument calibration data sheet, in the same way.

j. Analog Meter Calibration. Calibrate the analog meter as follows:

(1) Set FUNCTION switch A5S2 to position 9 (panel meter) (Figure 6-3). The dB CAL FACTOR and main data displays will both initialize with "[==]".

(2) With the Model 4220 in its normal upright operating position, adjust the analog meter pointer through the front panel access hole to align the pointer with the zero fiducial mark.

(3) Press the front panel WATTS key. The main data will show some nominal value near 5000.

(4) Using the front panel up and down arrow keys, adjust the displayed value until a full scale indication is obtained on the analog meter.

(5) Press the LOAD REF key.

(6) Press the ZERO key and repeat the procedures of steps 2 to 5 until the analog meter zero and full scale indications are aligned to within ± the width of the pointer.

k. GPIB EOS Selection. On instruments equipped with the IEEE-488 option, select the end-of-string termination to be used for bus communications as follows:

(1) Set FUNCTION switch A5S2 to position A (GPIB EOS) (Figure 6-3).

(2) Using the front panel up and down arrow keys, scroll through the menu of end-of-string terminations until the desired table number, as listed in Table 6-4, appears on the dB CAL FACTOR display. (Factory preset value is Table No. 0.)

(3) Press the LOAD REF key.

l. Set FUNCTION switch A5S2 to position B (BEC"Test"). This position of FUNCTION switch A5S2 is provided as an aid to troubleshooting. It is used in conjunction with TEST switch A6S1 to set the instrument to various fixed states of operation. Refer to Figure 6-4 for selectable test functions.

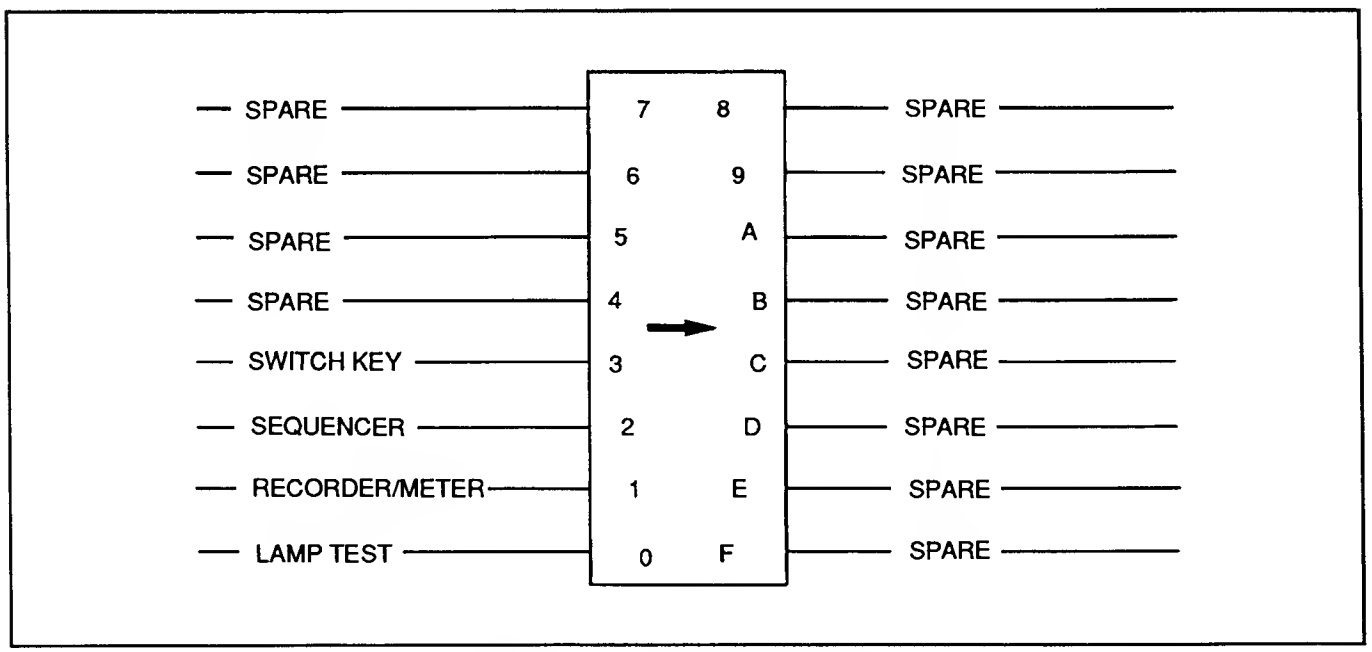

Figure 6-4. TEST Switch Positions

TABLE 6-4. END-OF-STRING SELECTIONS

Table No.	Terminates as Listener	Sends as Talker
0	LF	CRLF
1	CR	CRLF
2	LF	CR
3	CR	CR
4	LF	LF
5	CR	LF
6	LF	None
7	CR	None

(1) Lamp Test (position 0). In this position all the segments of all LEDs are turned on.

(2) Recorder/Meter (position 1). In this position a ramp voltage is applied to both the analog meter and recorder output. The applied voltage drives the meter from zero to beyond full scale and the recorder output from zero to +13.0 volts.

(3) Sequencer (position 2). An arrow symbol is sequenced across the display positions.

(4) Switch Key (position 3). A single decimal point is lighted. As each front panel pushbutton switch is pressed, a corresponding value from 0 to 9 is displayed in eight front panel display positions.

m. Set FUNCTION switch A5S2 to position C(AC Upscale). Proceed as follows:

(1) Connect the 4220 to RF Calibrator, Boonton Model 2520 or equivalent.

(2) Set RANGE switch A5S1 to position 1, corresponding to range 1.

(3) Turn the RF calibrator off, and zero the 4220.

(4) Turn on the RF calibrator and set it to the value given (in dBm) in Table 6-5 for the upscale range 1 calibration point.

(5) Using the front panel up and down arrow keys, adjust the AC gain constant to produce a power indication (in Watts) that agrees with the corresponding value set on the RF calibrator.

(6) Enter this value by pressing the front panel LOAD REF key.

(7) Rotate RANGE switch A5S1 to its other range positions in sequence, and repeat the above procedures for each range given in Table 6-5.

n. Set FUNCTION switch A5S2 to position D (AC Downscale). Proceed as follows:

(1) With the 4220 still connected to the RF calibrator, set RANGE switch A5S1 to position 1, corresponding to range 1.

(2) Turn off the RF calibrator and zero 4220. Turn on the RF calibrator and set it to the value given (in dBm) in Table 6-5 for the downscale range 1 calibration point.

(4) Using the front panel up and down keys, adjust the AC gain constant to produce a power indication (in Watts) that agrees with the corresponding value set on the RF calibrator.

(5) Enter this value by pressing the frontpanel LOAD REF key.

(6) Rotate RANGE switch A5S1 to its other range positions in sequence, and repeat the above procedures for each range given in Table 6-5.

o. Range 0 Data Entry. Range 0 data is the same as range 1 data, and may be entered as follows:

(1) Set FUNCTION switch A5S2 to position 3 (upscale entry) (Figure 6-3).

(2) Set RANGE switch A5S1 to position 1, which corresponds to range 1, and note the displayed value.

(3) Set RANGE switch A5S1 to position 0. Using the front panel up and down arrow keys, adjust the displayed value to correspond with the value noted for the range 1 position.

(4) Enter this value by pressing the frontpanel LOAD REF key.

(5) Set FUNCTION switch A5S2 to position 4 (downscale entry) (Figure 6-3).

(6) Set RANGE switch A5S1 to position 1 and note the displayed value.

(7) Set RANGE switch A5S1 to position 0. Using the front panel up and down arrow keys, adjust the displayed value to correspond with the value noted for the range 1 position.

(8) Enter this value by pressing the front panel LOAD REF key.

NOTE

The calibration procedure has now been completed. Turn off the instrument, set FUNCTION switch A5S2 and RANGE switch A5S1 to position 0, and position jumper A5P1 to the open position.

TABLE 6-5. UPSCALE AND DOWNSCALE CALIBRATION POINTS

Sensor	Range	Upscale Cal Point	Downscale Cal Point
51011, 51012,	1	-44 dBm (39.81 nW)	-50 dBm (10.000 nW)
51013	2	-34 dBm (398.1 nW)	-40 dBm (100.00 nW)
	3	-24 dBm (3.981 µW)	-30 dBm (1000.0 nW)
	4	-14 dBm (39.81 µW)	-20 dBm (10.000 µW)
	5	0 dBm (1000.0 µW)	-10 dBm (100.00 µW)
	6	16 dBm (39.81 mW)	6 dBm (3.981 mW)
51015	1	-34 dBm (398.1 nW)	-40 dBm (100.00 nW)
	2	-24 dBm (3.981 µW)	-30 dBm (1000.0 nW)
	3	-14 dBm (39.81 µW)	-20 dBm (10.000 µW)
	4	-4 dBm (398.1 µW)	-10 dBm (100.00 µW)
	5	10 dBm (10.000 mW)	0 dBm (1000.0 mW)
	6	26 dBm (398.1 mW)	16 dBm (39.81 mW)
51033	1	-24 dBm (3.981 µW)	-30 dBm (1000.0 nW)
	2	-14 dBm (39.81 µW)	-20dBm (10.000 µW)
	3	-4 dBm (398.1 µW)	-10 dBm (100.00 µW)
	4	6 dBm (3.981 mW)	0 dBm (1000.0 µW)
	5	20 dBm (100.00 mW)	10 dBm (10.000 mW)
	6	30 dBm (1000.0 mW)	26 dBm (398.1 mW)
51035	1	-45 dBm (31.62 nW)	-50 dBm (10.000 nW)
	2	-34 dBm (398.1 nW)	-40 dBm (100.00 nW)
	3	-24 dBm (3.981 µW)	-30 dBm (1000.0 nW)
	4	-12 dBm (63.10 mW)	-20 dBm (10.000 µW)
	5	0 dBm (1000.0 µW)	-8 dBm (1.585 µW)
	6	10 dBm (10.000 mW)	4 dBm (25.12 µW)
51036, 51972	2	-44 dBm (39.81 nW)	-50 dBm (10.000 nW)
	3	-34 dBm (398.1 nW)	-38 dBm (158.5 nw)
	4	-20 dBm (10.000 µW)	-28 dBm (1.585 µW)
	5	-10 dBm (100.00 µW)	-16 dBm (25.12 µW)
	6	10 dBm (10.000 mW)	-4 dBm (398.1 µW)
51037	2	-44 dBm (39.81 nW)	-50 dBm (10.000 nW)
	3	-34 dBm (398.1 nW)	-38 dBm (158.5 nW)
	4	-20 dBm (10.000 µW)	-28 dBm (1.585 µW)
	5	-10 dBm (100.00 µW)	-18 dBm (15.85 µW)
	6	10 dBm (10.000 mW)	0 dBm (1000.0 µW)

TABLE 6-5. UPSCALE AND DOWNSCALE CALIBRATION POINTS (Cont.)

Sensor	Range	Upscale Cal Point	Downscale Cal Point
51045	2	-38 dBm (158.5 nW)	-44 dBm (39.81 nW)
	3	-28 dBm (1.585 µW)	-35 dBm (316.2 nW)
	4	-16 dBm (25.12 µW)	-25 dBm (3.162 µW)
	5	-4 dBm (398.1 µW)	-13 dBm (50.12 µW)
	6	10 dBm (10.000 mW)	0 dBm (1000.0 µW)
51046	1	-46 dBm (25.12 nW)	-50 dBm (10.000 nW)
	2	-34 dBm (398.1 nW)	-41 dBm (79.43 nW)
	3	-24 dBm (3.981 µW)	-31 dBm (794.3 nW)
	4	-12 dBm (63.10 µW)	-20 dBm (10.000 µW)
	5	0 dBm (1000.0 µW)	-8 dBm (158.5 µW)
	6	10 dBm (10.000 mW)	3 dBm (1.995 mW)
51047	1	-45 dBm (31.62 nW)	-49 dBm (12.59 nW)
	2	-35 dBm (316.2 nW)	-42 dBm (63.10 nW)
	3	-24 dBm (3.981 µW)	-32 dBm (631.0 nW)
	4	-13 dBm (50.12 µW)	-21 dBm (7.943 µW)
	5	-2 dBm (631.0 µW)	-10 dBm (100.00 µW
	6	10 dBm (10.000 mW)	1 dBm (1.259 mW)
51051	0	-53 dBm (5.012 nW)	-58 dBm (1.585 nW)
	1	-43 dBm (50.12 nW)	-48 dBm (15.85 nW)
	2	-33 dBm (501.2 nW)	-38 dBm (158.5 nW)
	3	-23 dBm (5.012 µW)	-28 dBm (1.585 µW)
	4	-12 dBm (63.10 µW)	-18 dBm (15.85 µW)
	5	3 dBm (1.995 mW)	-5 dBm (316.2 µW)
	6	10 dBm (10.00 mW)	6 dBm (3.981 mW)
51063	0	5 dBm (3.162 mW)	0 dBm (1.000 mW)
	1	16 dBm (39.81 mW)	9 dBm (7.943 mW)
	2	26 dBm (398.1 mW)	19 dBm (79.43 mW)
	3	33 dBm (1.995 W)	29 dBm (794.3 mW)
51100	1	-4 dBm (398.1 µW)	-11 dBm (79.43 µW)
	2	6 dBm (3.981 mW)	-1 dBm (794.3 µW)
	3	16 dBm (39.81 mW)	9 dBm (7.943 mW)
	4	-----	19 dBm (79.43 mW)

SECTION VII
PARTS LIST

7-1 INTRODUCTION.

7-2. The replaceable parts for the Model 4220 are listed in Table 7-2. The replaceable parts list contains the reference symbol, description, manufacturer, and both the BEC and manufacturer part numbers. Table 7-1 lists the manufacturer's federal supply code numbers.

TABLE 7-1 MANUFACTURER'S FEDERAL SUPPLY CODE NUMBERS

FSC	Company Name	FSC	Company Name
S4217	United Chemicon	34335	Advanced Micro Devices
01121	Allen Bradley	34649	Intel Corp.
01295	Texas Instruments	51406	Murata Corp of America
02735	RCA Solid State Division	51640	Analog Devices Inc.
04222	AVX	52653	Birtcher
04713	Motorola Semiconductor	54420	Dage-MTI
04901	Boonton Electronics Corp.	54426	Buss Fuses
06383	Panduit Corp.	56289	Sprague Electric Company
06776	Robinson Nugent, Inc.	57582	Kahgan Electronics Corp.
07263	Fairchild Semiconductor	59474	Jeffers Electronics Inc.
13812	Dialco div of Amperex	61637	Kemet-Union Carbide
14655	Cornell-Dubilier	71450	CTS Corp.
15281	General Instrument	73138	Beckman Instr., Helipot Div.
19701	Mepco Electra	95146	Alco
24253	ITT Pomona	98291	Sealectro Corp.
27014	National Semiconductor		
27264	Molex, Inc.	**Company Code**	**Company Name**
27735	F-Dyne Electronics		
27777	Varo Semiconductors		
28480	Hewlett-Packard Corp.	MODUTE	MODUTEC
31313	Components Corp.	SCHURT	SCHURT
31918	ITT Schadow, Inc.	TOSHIB	TOSHIBA
32293	Intersil, Inc.	TUSONI	TUSONIX
32575	AMP	ZYTREX	ZYTREX
33297	NEC		

Frame Assembly A1

04250101A `4220-S/2' FRAME ASSY (A1)
MODEL: 4220-S/2

REFERENCE DESIGNATOR	DESCRIPTION	FED. CODE	MANUFACTURER PART NUMBER	QTY	BEC PART NUMBER
A2	`4220-S/2' REAR PANEL ASSY	04901	04250201A	1	04250201A
A3	`4220' POWER SWITCH ASSY	04901	04250300A	1	04250300A
A4	PWA `4220' DISPLAY/KEYBOARD	04901	04250400A	1	04250400A
A5	PWA `4220' CONTROL	04901	04250500B	1	04250500B
A6	PWA `4220' INPUT	04901	04250600A	1	04250600A
A7	`4220-S/2' CHOPPER ASSY	04901	04312204A	1	04312204A
A7A1	PWA `4220-S/2' CHOPPER	04901	04250701A	1	04250701A
A8	`4300' 50 MHZ CALIBRATOR ASSY	04901	04313200B	1	04313200B
A8A1	PWA `4220' 50 MHz CALIBRATOR	04901	04313100A	1	04313100A
A9	`4220' SENSOR CONNECTOR ASSY	04901	04250900A	1	04250900A
LC1	LINECORD	16482	1725B	1	568104 A
E5-6	TERMINAL INSULATED	71279	570-2045-1-01-00	2	510013000
R3	RES COMP 1K 5% 2W	01121	HB1025	1	304087000
W1	CABLE ASSY FLAT 40 CKT 6.00 L	04901	92016900A	1	92016900A
W2	CABLE ASSY FLAT 26 CKT 6.00 L	04901	92017000A	1	92017000A
W3	CABLE ASSY WIRE 22GA 4C 5.00L	04901	57123101A	1	57123101A
W4	CABLE ASSY WIRE 24GA 2C 0.50L	04901	57121709A	1	57121709A

Rear Panel Assembly A2

04250201A `4220-S/2' REAR PANEL ASSY (A2)
MODEL: 4220-S/2

REFERENCE OESIGNATOR	DESCRIPTION	FED. CODE	MANUFACTURER PART NUMBER	QTY	BEC PART NUMBER
F1	FUSE 0.3 AMP 250V MDL	54426	MDL 0.3	1	545507000
F1	FUSE 0.2 AMP (FOR 220V OPER)	54426	MDL 0.2	1	545508000
J1	CONN COAX BNC	54420	UG-625B/U	1	479123000
J2	CONN LINE CORD	82389	EAC309	1	477281000
P1	CONNECTOR 5 CIRCUIT	06383	CE156F24-5-C	1	479394000
T1	TRANSFORMER POWER	04901	44609100A	1	44609100A
W1	CABLE ASSY WIRE 24GA 2C 7.00L	04901	57222909A	1	57222909A
W2	CABLE ASSY (PWR SW)	04901	57118201A	1	57118201A
XF1A	FUSE HOLDER	75915	FEU031.1673	1	482117000
XF1B	FUSE CARRIER GRAY 1/4 x 1-1/4	75915	FEK031.1666	1	482114000
XF2B	FUSE CARRIER BLK 5mm x 20mm	75915	FEK031.1666	1	482115000

Power Switch Assembly A3

04250300A REV: AA `4220' POWER SWITCH ASSY A3
MODEL: 4220

REFERENCE DESIGNATOR	DESCRIPTION	FED. CODE	MANUFACTURER PART NUMBER	QTY	BEC PART NUMBER
S1	SWITCH ROCKER DPDT	13812	572-2121-0103-010	1	465286000
W1	CABLE ASSY WIRE 24GA 4C 10.00L	04901	57124700A	1	57124700A

Display/Keyboard Assembly A4

04250400A REV: DB PWA `4220' DISPLAY/KEYBOARD A4
MODEL: 4220

REFERENCE DESIGNATOR	DESCRIPTION	FED. CODE	MANUFACTURER PART NUMBER	QTY	BEC PART NUMBER
C1	CAP EL 10uF 20% 25V	S4217	SM-25-VB-10-M	1	283336000
CR1-4	DIODE SIG 1N4001	04713	1N4001	4	530151000
DS1	DISPLAY NUMERIC 5082-7656 ONLY	28480	5082-7656-S02	1	536812000
DS2-5	DISPLAY NUMERIC 5082-7651	28480	5082-7651-S02	4	536811000
DS6-9	DISPLAY NUMERIC LED	28480	5082-7611-S02	4	53681411A
DS10-13	LED LIGHT BAR MOD HLMP-2620	28480	HLMP-2620	4	536027000
J1	CONN M 40 CKT RT ANGLE 3 WALL	06776	IDH-40K2-SR3-TG30	1	47741240A
M1	METER MARKED	MODUTE	00-700-098	1	55433500A
R1	RES NETWORK 22 OHM +-2 OHM 2W	01121	316B-220	1	345034000
R2	RES MF 150 OHM 1% 1/4W	19701	5043ED150ROF	1	341217000
S1-10	SWITCH PUSHBUTTON SPST	31918	210272	10	465230000
U1	IC ULN2803A TRANSISTOR ARRAY	56289	ULN2803A	1	534274000
U2	IC 74HCT138 1 OF 8 DECODER	01295	74HCT138N	1	534375000
U3	IC UDN2585A	56289	UDN2585A	1	534392000
W1	CABLE ASSY WIRE 22GA	04901	57124800A	1	57124800A
XDS1-5	SOCKET IC 14 PIN DUAL WIPE	06776	ICO-143-S8-TG	5	47308214A
XDS6-9	SOCKET IC 14 PIN DUAL GRIP	01295	C8214-50	4	47308314A
XDS10-13	SOCKET IC 16 PIN DUAL WIPE	06776	ICO-163-S8-TG	4	47308216A

Control Assembly A5

04250500B PWA '4220' CONTROL (A5)
MODEL: 4220-S/2

REFERENCE DESIGNATOR	DESCRIPTION	FED. CODE	MANUFACTURER PART NUMBER	QTY	BEC PART NUMBER
C1	CAP MICA 250pF 5% 500V	14655	C015F0251J03	1	200036000
C2	CAP MICA 100pF 5% 500V	14655	CM05FD101J03	1	200001000
C3-4	CAP EL 2200uF -10%+50% 35V	57582	KSMM-2200-35	2	283351000
C5	CAP EL 4700uF -10%+50% 16V	S4217	SM-16-VB-4700M	1	283352000
C6-8	CAP EL 100uF 20% 25V	S4217	SM-25-VB-101M	3	283334000
C9-17	CAP CER 0.1uF 20% 50V	04222	SR215E104MAA	9	224268000
C18	CAP EL 10uF 20% 25V	S4217	SM-25-VB-10-M	1	283336000
CR1	DIODE BRIDGE KBP-02	15281	KBP02	1	532013000
CR2	DIODE BRIDGE VS-248 2A 200 PIV	27777	VS-248	1	532014000
CR3-5	DIODE SIG 1N4001	04713	1N4001	3	530151000
CR6-7	DIODE ZENER 1N5231B 5.1V 5%	04713	1N5231B	2	530169000
CR8-15	DIODE SIG 1N914	01295	1N914	8	530058000
J1	CONN M 26 CKT 4 WALL STR LATCH	06776	IDH-26PK2-S3-TG30	1	47741426A
J2	CONNECTOR 20 PIN	27264	22-02-2205	1	479399000
J3-4	HEADER 5 PIN STRAIGHT	06383	MPSS156-5-D	2	477345000
J5	CONN M 02 CKT ST POLZ .1CT	06383	MPSS100-2-A	1	47740702A
J6	HEADER 2 PIN STRAIGHT	06383	HPSS156-2-C	1	477342000
J7	CONN M 40 CKT (LATCHED)	06776	IDH-40PK2-S3-TG30	1	47741440A
L1	INDUCTOR 3.9uH 10%	59474	4436-7K	1	40030700A
P1	SHUNT 2 CIRCUIT	27264	15-38-1024	1	483253000
R1	RES MF 4.75K 1% 1/4W	19701	5043ED4K750F	1	341365000
R2	RES MF 332 OHM 1% 1/4W	19701	5043E0332R0F	1	341250000
R3	RES MF 2.00K 1% 1/4W	19701	5043E02K000F	1	341329000
R4-5	RES MF 10.0K 1% 1/4W	19701	5043ED10K00F	2	341400000
R6	RES MF 2.00K 1% 1/4W	19701	5043ED2K000F	1	341329000
R7	RES MF 1.10K 1% 1/4W	19701	5043ED1K100F	1	341304000
R8	RES NETWORK 10K 2% 1.5W 10pin	71450	750-101-R10K	1	345038000
R9-10	RES MF 4.75K 1% 1/4W	19701	5043E04K750F	2	341365000
R11	RES MF 10.0K 1% 1/4W	19701	5043ED10K00F	1	341400000
R12	RES MF 47.5K 1% 1/4W	19701	5043E047K50F	1	341465000
R13	RES MF 4.75K 1% 1/4W	19701	5043E04K750F	1	341365000
R14	RES MF 100 OHM 1% 1/4W	19701	5043ED100R0F	1	341200000
R15-16	RES MF 100K 1% 1/4W	19701	5043E0100K0F	2	341500000
R17	RES MF 9.53K 1% 1/4W	19701	5043E09K530F	1	341394000
R18	RES MF 4.75K 1% 1/4W	19701	5043ED4K750F	1	341365000
R19	RES COMP 1.2M 5% 1/4W	01121	CB1255	1	343608000
R20	RES MF 4.75K 1% 1/4W	19701	5043ED4K750F	1	341365000
R21	RES NETWORK 10K 2% 1.5W 10pin	71450	750-101-R10K	1	345038000
R22-23	RES NETWORK 150 OHM 2% 1.5W	73138	898-3-R150	2	345026000
R24-25	RES MF 10.0K 1% 1/4W	19701	5043ED10K00F	2	341400000
S1	SWITCH ROTARY DIP BCD	95146	DRD-10	1	46530210A
S2	SWITCH ROTARY DIP BINARY	95146	DRD-16	1	46530216A
TP1-5	TERMINAL WIRE LOOP TEST POINT	31313	TP-103-02	5	48330600A
U1	IC Z80C CPU CMOS	56708	Z84C00-04PE	1	53440900A
U2	IC 7404 HEX INVERTER	01295	SN7404N	1	534042000
U3	IC UA7815 REGULATOR	07263	uA7815	1	535056000
U4	IC UA7915UC REGULATOR	07263	uA7915UC	1	535103000
U5	IC UA7805UC VOLT REG	07263	uA7805UC	1	53511700A
U6	IC EPROM PROG 4220	04901	53442200A	1	53452200A

Control Assembly A5 (Cont.)

U7	IC 4013B DUAL FLIP FLOP	02735	CD4013BE	1	534205000
U8	IC 5564 8Kx8 RAM CMOS 28 DIP	33297	UPD4464C-15L	1	534403000
U9	IC 74HCT139 DUAL DEMUX	02735	CD74HCT139E	1	53444208A
U10	IC 74HCT541 OCTAL BUFFER	01295	74HCT541N	1	534383000
U11	IC 339 QUAD COMPARATOR	27014	LM339N	1	535018000
U12	IC EEPROM 2816 2Kx8 200ns	34649	2816B-2	1	53452100A
U13	IC 7407 HEX BUFFER	01295	SN7407N	1	534066000
U14-15	IC 74HCT138 1 OF 8 DECODER	01295	74HCT138N	2	534375000
U16	IC 74HC32 QUAD 2 INPUT OR	02735	CD74HC32E	1	53442501A
U17	IC 4001B QUAD 2 INPUT NOR	02735	CD4001BE	1	53444721A
U18	IC 8279-2 KEYBD/DISP INTERFACE	33297	uPD8279C-2	1	534211000
U19	IC 74HCT541 OCTAL BUFFER	01295	74HCT541N	1	534383000
U20-21	IC 74LS373 OCTAL LATCH	01295	SN74LS373N	2	534237000
XU1	SOCKET IC 40 PIN	06776	ICN-406-S4-TG	1	473052000
XU6	SOCKET IC 28 PIN	06776	ICN-286-S4-TG	1	473044000
XU8	SOCKET IC 28 PIN	06776	ICN-286-S4-TG	1	473044000
XU12	SOCKET IC 24 PIN	06776	ICN-246-S4-G	1	473043000
XU18	SOCKET IC 40 PIN	06776	ICN-406-S4-TG	1	473052000

Input Assembly A6

04250600A PWA `4220' INPUT (A6)
MODEL: 4220-S/2

REFERENCE DESIGNATOR	DESCRIPTION	FED. CODE	MANUFACTURER PART NUMBER	QTY	BEC PART NUMBER
C1-3	CAP CER 1000pF 10% 200V	61637	C052K102K2X5CA	3	224289000
C4-5	CAP MICA 470pF 1% 500V	14655	CD15F0471F03	2	200050000
C6	CAP EL 100uF 20% 25V	S4217	SM-25-VB-101M	1	283334000
C7	CAP CER 0.1uF 20% 50V	04222	SR215E104MAA	1	224268000
C8-9	CAP EL 10uF 20% 25V	S4217	SM-25-VB-10-M	2	283336000
C10	CAP EL 100uF 20% 25V	S4217	SM-25-VB-101M	1	283334000
C11-12	CAP EL 10uF 20% 25V	S4217	SM-25-VB-10-M	2	283336000
C13	CAP CER 0.1uF 20% 50V	04222	SR215E104MAA	1	224268000
C14-15	CAP MPC 0.47uF 1% 50V	27735	MPC-53-0.47-50-1	2	23417500A
C16	CAP MICA 430pF 1% 500V	14655	CD15F0431F03	1	200037000
C17-18	CAP CER 1.0uF 20% 50V	04222	SR305E105MAA	2	224264000
C19	CAP CER 0.01uF 10% 100V	04222	SR201C103KAA	1	224269000
C20	CAP CER 0.1uF 20% 50V	04222	SR215E104MAA	1	224268000
C21	CAP EL 10uF 20% 25V	S4217	SM-25-VB-10-M	1	283336000
C22	CAP CER 0.01uF 10% 100V	04222	SR201C103KAA	1	224269000
C23-30	CAP CER 0.1uF 20% 50V	04222	SR215E104MAA	8	224268000
C31	CAP CER 1.0uF 20% 50V	04222	SR305E105MAA	1	224264000
C32-35	CAP CER 0.001uF 10% 50V	04222	SR211A102KAA	4	22440401A
CR1-2	DIODE HSCH1001 (1N6263)	28480	HSCH-1001	2	530174000
CR3-6	DIODE SIG 1N914	01295	1N914	4	530058000
J2	CONN M 05 CKT ST POLZ .1CT	06383	HPSS100-5-C	1	477382000
J3	CONN M 26 CKT 4 WALL STR LATCH	06776	IOH-26PK2-S3-TG30	1	47741426A
J4	CONN M 02 CKT ST POLZ .1CT	06383	MPSS100-2-A	1	47740702A

Input Assembly A6 (Cont.)

J5	HEADER 5 PIN STRAIGHT	06383	MPSS156-5-D	1	477345000
J6	CONN M 02 CKT ST POLZ .1CT	06383	MPSS100-2-A	1	47740702A
J7	CONN M 03 CKT ST POLZ .1CT	06383	MPSS100-3-A	1	47740703A
J1/1-8	SOCKET SPRING COMPONENT LEAD	32575	1-332070-7	1	479333000
Q1-2	TRANS PNP 2N3906	04713	2N3906	2	528076000
Q3-4	TRANS NPN 2N3904	04713	2N3904	2	528071000
Q5	TRANS PNP 2N3906	04713	2N3906	1	528076000
Q6-7	TRANS NPN 2N3904	04713	2N3904	2	528071000
R1	RES MF 402K 1% 1/4W	19701	5043ED402K0F	1	341558000
R2	RES VAR 25K 10% 0.5W	73138	72PR25K	1	311400000
R3	RES MF 402K 1% 1/4W	19701	5043ED402K0F	1	341558000
R4-9	RES MF 221 OHM 1% 1/4W	19701	5043ED221R0F	6	341233000
R10	RES MF 8.25K 1% 1/4W	19701	5043ED8K250F	1	341388000
R11	RES MF 100K 1% 1/4W	19701	5043ED100K0F	1	341500000
R12	RES MF 10.0K 1% 1/4W	19701	5043ED10K00F	1	341400000
R13	RES MF 887 OHM 1% 1/4W	19701	5043ED887R0F	1	341291000
R14	RES MF 442 OHM 1% 1/4W	19701	5043ED442R0F	1	341262000
R15	RES MF 887 OHM 1% 1/4W	19701	5043ED887R0F	1	341262000
R16	RES MF 10.0K 1% 1/4W	19701	5043ED10K00F	1	341400000
R17	RES MF 100K 1% 1/4W	19701	5043ED100K0F	1	341500000
R18	RES MF 8.25K 1% 1/4W	19701	5043ED8K250F	1	341388000
R19-20	RES MF 6.19K 1% 1/4W	19701	5043ED6K190F	2	341376000
R21	RES MF 5.62K 1% 1/4W	19701	5043ED5K620F	1	341372000
R22	RES MF 3.32K 1% 1/4W	19701	5043ED3K320F	1	341350000
R23-24	RES MF 10.0K 1% 1/4W	19701	5043ED10K00F	2	341400000
R25	RES MF 2.49K 1% 1/4W	19701	5043ED2K490F	1	341338000
R26	RES MF 1.00K 1% 1/4W	19701	5043ED1K000F	1	341300000
R27	RES MF 3.32K 1% 1/4W	19701	5043ED3K320F	1	341350000
R28-29	RES MF 1.00K 1% 1/4W	19701	5043ED1K000F	2	341300000
R30	RES MF 113K 1% 1/4W	19701	5043ED113K0F	1	341505000
R31	RES MF 18.2K 1% 1/4W	19701	5043ED18K20F	1	341425000
R32	RES MF 1.21K 1% 1/4W	19701	5043ED1K210F	1	341308000
R33	RES MF 806 OHM 1% 1/4W	19701	5043ED806R0F	1	341287000
R34	RES MF 5.62K 1% 1/4W	19701	5043ED5K620F	1	341372000
R35	RES MF 2.49K 1% 1/4W	19701	5043ED2K490F	1	341338000
R36	RES MF 53.6K 1% 1/4W	19701	5043ED53K60F	1	341470000
R37	RES COMP 10M 5% 1/4W	01121	CB1065	1	343700000
R38	RES COMP 1.2M 5% 1/4W	01121	CB1255	1	343608000
R39	RES MF 53.6K 1% 1/4W	19701	5043ED53K60F	1	341470000
R40	RES MF 14.0K 1% 1/4W	19701	5043ED14K00F	1	341414000
R41	RES MF 10.0K 1% 1/4W	19701	5043ED10K00F	1	341400000
R42	RES MF 147K 1% 1/4W	19701	5043ED147K0F	1	341516000
R43	RES MF 39.2K 1% 1/4W	19701	5043ED39K20F	1	341457000
R44	RES MF 28.7K 1% 1/4W	19701	5043ED28K70F	1	341444000
R45	RES MF 1.00K 1% 1/4W	19701	5043ED1K000F	1	341300000
R46	RES MF 26.7K 1% 1/4W	19701	5043ED26K70F	1	341441000
R47	RES MF 4.75K 1% 1/4W	19701	5043ED4K750F	1	341365000
R48	RES MF 150 OHM 1% 1/4W	19701	5043ED150R0F	1	341217000
R49	RES MF 9.09K 1% 1/4W	19701	5043ED9K090F	1	341392000
R50	RES MF 8.87K 1% 1/4W	19701	5043ED8K870F	1	341391000
R52	RES COMP 1.2M 5% 1/4W	01121	CB1255	1	343608000
R53	RES NETWORK 100K 2% 1.5W	71450	750-61-R100K	1	345032000
R54-55	RES COMP 12M 5% 1/4W	01121	CB1265	2	343708000
R56-61	RES MF 10.0K 1% 1/4W	19701	5043ED10K00F	6	341400000
R62	RES MF 2.49K 1% 1/4W	19701	5043ED2K490F	1	341338000
S1	SWITCH ROTARY DIP BINARY	95146	DRD-16	1	46530216A
TP1-14	TERMINAL WIRE LOOP TEST POINT	31313	TP-103-02	14	48330600A

Input Assembly A6 (Cont.)

U1	(G) IC 356B OP AMP SELECTED	04901	535062000	1	535062000
U2	IC 6208 4 CHAN DIF MULTPXR	32293	IH6208CPE	1	534266000
U3	(G) IC 356B OP AMP SELECTED	04901	535062000	1	535062000
U4	IC 4030B QUAD EXCLUSIVE OR	02735	CD4030BE	1	53444722A
U5	IC 74HC126 QUAD BUS BUFF GATES	01295	SN74HC126N	1	53442509A
U6	IC TL072BCP DUAL OP AMP	01295	TL072BCP	1	535102000
U7	IC 6108 CMOS CHAN MULTPXR	32293	IH6108CPE	1	534265000
U8	IC 74HCT373 OCTAL LATCH	01295	SN74HCT373N	1	53444209A
U9	IC 78L05 VOLT REG	07263	uA78L05AWC	1	535044000
U10	IC 79L05 VOLT REG	04713	MC79L05ACP	1	535090000
U11	IC 74HCT373 OCTAL LATCH	01295	SN74HCT373N	1	53444209A
U12	IC 4001B QUAD 2 INPUT NOR	02735	CD4001BE	1	53444721A
U13	IC 4053B TRPL DECDR/DEMULTPXR	04713	MC14053BCP	1	534207000
U14	IC 40138 DUAL FLIP FLOP	02735	CD40138E	1	534205000
U15	IC AD7549JN DUAL 12 BIT DAC	24355	AD7549JN	1	53512700A
U16	IC 4046B PHASE LOCK LOOP	02735	CD4046BE	1	53444706A
U17	IC AD584JHV VOLTAGE REGULATOR	51640	AD584JH	1	535123000
U18-19	IC 356P OP AMP	04713	LF356N	2	535040000
U20	IC TL072BCP DUAL OP AMP	01295	TL072BCP	1	535102000
U21	IC 4040B COUNTER/DIVIDER	02735	CD4040BE	1	534275000
U22	IC 1205 12 BIT ADC 24 PIN DIP	27014	ADC1205BCJ-1	1	53442001A
U23	IC 74HCT541 OCTAL BUFFER	01295	74HCT541N	1	534383000
XU1	SOCKET IC 8 PIN	06776	ICN-083-S3-G	1	473041000
XU3	SOCKET IC 8 PIN	06776	ICN-083-S3-G	1	473041000
XU22	SOCKET IC 24 PIN	06776	ICN-246-S4-G	1	473043000

Chopper Assembly A7

04312204A `4220-S/2' CHOPPER ASSY (A7)
MODEL: 4220-S/2

REFERENCE DESIGNATOR	DESCRIPTION	FED. CODE	MANUFACTURER PART NUMBER	QTY	BEC PART NUMBER
A1	PWA `4220-S/2' CHOPPER CONFORM	04901	04250701A	1	04250701A

Chopper Assembly A7A1

04250701A PWA `4220-S/2' CHOPPER CONFORM (A7A1)
MODEL: 4220-S/2

REFERENCE DESIGNATOR	DESCRIPTION	FED. CODE	MANUFACTURER PART NUMBER	QTY	BEC PART NUMBER
C1-2	CAP CER 0.001uF 10% 50V	04222	SR211A102KAA	2	22440401A
C3-4	CAP PP 0.022uF 10% 100V	27735	PP11-.022-100-10	2	23417800A
C5-6	CAP CER 0.001uF 10% 50V	04222	SR211A102KAA	2	22440401A
C7	CAP MICA 8.0pF 10% 300V	57582	KD5080D301	1	205001000
J1/1-8	TERMINAL .040 OD .270 LG .062M	98291	229-1071-230	1	510038000
J2/1-2	CONNECTOR PIN	71279	460-1521-02-03-00	1	477400000
R1-R2	RES VAR 25K 10% 0.5W	73138	72PR25K	2	311400000
R3-R4	RES MF 51.1K 1% 1/4W	19701	5043ED51K10F	2	341468000
U1	(G) IC SELECTED QUAD SWITCH	04901	53422301A	1	53422301A

50 MHz Calibrator Assembly A8

04313200B `4300' 50 MHZ CALIBRATOR ASSY (A8)
MODEL: 4220-S/2

REFERENCE DESIGNATOR	DESCRIPTION	FED. CODE	MANUFACTURER PART NUMBER	QTY	BEC PART NUMBER
A1	PWA `4300' 50 MHz CALIBRATOR	04901	04313100A	1	04313100A
C6	CAP FT 1000pF 20% 500V	59660	2499-003-X5S0102M	1	227105000
W26	CABLE ASSY WIRE 24GA 2C 8.50L	04901	57222904A	1	57222904A

50 MHz Calibrator Assembly A8A1

04313100A REV: AA PWA `4220' 50 MHz CALIBRATOR A8A1
MODEL: 4220

REFERENCE DESIGNATOR	DESCRIPTION	FED. CODE	MANUFACTURER PART NUMBER	QTY	BEC PART NUMBER
AR1	IC 301A OP AMP	27014	LM301AN	1	535012000
C1	CAP CER 470pF 10% 500V	33883	TYPE JF	1	224219000
C2	CAP MICA 100pF 5% 300V	20307	DM5-FC101J	1	205006000
C3	CAP EL 10uF 20% 25V	S4217	SM-25-VB-10-M	1	283336000
C4	CAP VAR CER 3.5-18pF 250V	91293	9373	1	281011000
C5	CAP CER 1000pF 10% 600V	16546	CE-102	1	224310000
C7	CAP EL 10uF 20% 25V	S4217	SM-25-VB-10-M	1	283336000
C8	CAP CER 0.01uF 100V	33883	BT Z5U	1	224119000
C9	CAP MICA 36pF 5% 300V	14655	CD5EC360J	1	205003000
C10	CAP MICA 200pF 5% 100V	14655	CD5FA201J	1	205024000
C11	CAP MICA 10pF 5% 300V	14655	CD5WCC100J	1	205002000
C12	CAP VAR CER 3.5-18pF 250V	91293	9373	1	281011000
CR1-2	DIODE HSCH1001 (1N6263)	28480	HSCH-1001	2	530174000
CR3	DIODE MV-1650	04713	MV1650	1	530762000
L1	INDUCTOR 4.7uH 10%	24226	10/471	1	400384000
L2	INDUCTOR 0.56uH 10%	24226	10/560	1	400382000
L3	INDUCTOR 0.022 uH	04901	40044400A	1	40044400A
Q1	TRANS NPN 2N3904	04713	2N3904	1	528071000
R1	RES MF 1.50K 1% 1/4W	19701	5043ED1K500F	1	341317000
R2-3	RES MF 100K 1% 1/4W	19701	5043ED100K0F	2	341500000
R4	RES VAR 1K 10% 0.5W	32997	3299X-1-102	1	311410000
R6	RES MF 100K 1% 1/4W	19701	5043ED100K0F	1	341500000
R7	RES MF 2.43K 1% 1/4W	19701	RN55D-2431-F	1	341337000
R8-9	RES MF 1.00K 1% 1/4W	19701	5043ED1K000F	2	341300000
R10	RES MF 10.0K 1% 1/4W	19701	5043ED10K00F	1	341400000
R11	RES MF 5.11K 1% 1/4W	19701	5043ED5K110F	1	341368000
R12	RES MF 1.21K 1% 1/4W	19701	5043ED1K210F	1	341308000
R13	RES MF 1.30K 1% 1/4W	19701	5043ED1K300F	1	341311000
R14	RES MF 75.0 OHM 1% 1/4W	19701	5043ED75R00F	1	341184000
R15	RES MF 50.00 OHM 0.1% 1/4W	64537	PME55-T9	1	325916000
U1	IC AD581JH VOLT REF	51640	AD581JH	1	535053000

Sensor Connector Assembly A9

04250900A REV: AA `4220' SENSOR CONNECTOR ASSY A9
MODEL: 4220

REFERENCE DESIGNATOR	DESCRIPTION	FED. CODE	MANUFACTURER PART NUMBER	QTY	BEC PART NUMBER
J1	(G) CONNECTOR ASSY FEMALE	04901	09214101C	1	09214101C

GPIB Assembly A10

04251000A REV: BA PWA `4220-01' GPIB ASSEMBLY A10
MODEL: 4220

REFERENCE DESIGNATOR	DESCRIPTION	FED. CODE	MANUFACTURER PART NUMBER	QTY	BEC PART NUMBER
C1	CAP CER 0.1uF 20% 50V	04222	SR215E104MAA	1	224268000
J1	CONN M 20 CKT HDR SNG ROW .1CT	DUPONT	65632-120	1	47742720A
J2	CONN F 24 CKT RT ANGL PC MTG	00779	553119-1	1	47947800A
U1	IC 9914ANL IEEE BUS PROCESSOR	01295	TMS9914ANL	1	534288000
U2	IC 75160 IEEE BUS TRANSCEIVER	01295	SN75160BN	1	534286000
U3	IC 75161 IEEE BUS TRANSCEIVER	01295	SN75161BN	1	534287000
XU1	SOCKET IC 40 PIN	06776	ICN-406-S4-TG	1	473052000

SECTION VIII
SCHEMATIC DIAGRAMS

TABLE 8-1. LIST OF SCHEMATICS.

Figure		Page
Figure 8-1.	Frame Assembly A1, Schematic Diagram	8-3
Figure 8-2.	Display/Keyboard Assembly A4, Parts Location	8-4
Figure 8-3.	Display/Keyboard Assembly A4, Schematic Diagram	8-5
Figure 8-4.	Control Assembly A5, Parts Location	8-6
Figure 8-5.	Control Assembly A5, Schematic Diagram	8-7
Figure 8-6.	Input Assembly A6, Parts Location	8-8
Figure 8-7.	Input Assembly A6, Schematic Diagram	8-9
Figure 8-8.	Chopper Assembly A7, Parts Location	8-10
Figure 8-9.	Chopper Assembly A7, Schematic Diagram	8-11
Figure 8-10.	50 MHz Calibrator Assembly A8, Parts Location	8-12
Figure 8-11.	50 MHz Calibrator Assembly A8, Schematic Diagram	8-13
Figure 8-12.	GPIB Assembly A10, Parts Location	8-14
Figure 8-13.	GPIB Assembly A10, Schematic Diagram	8-15

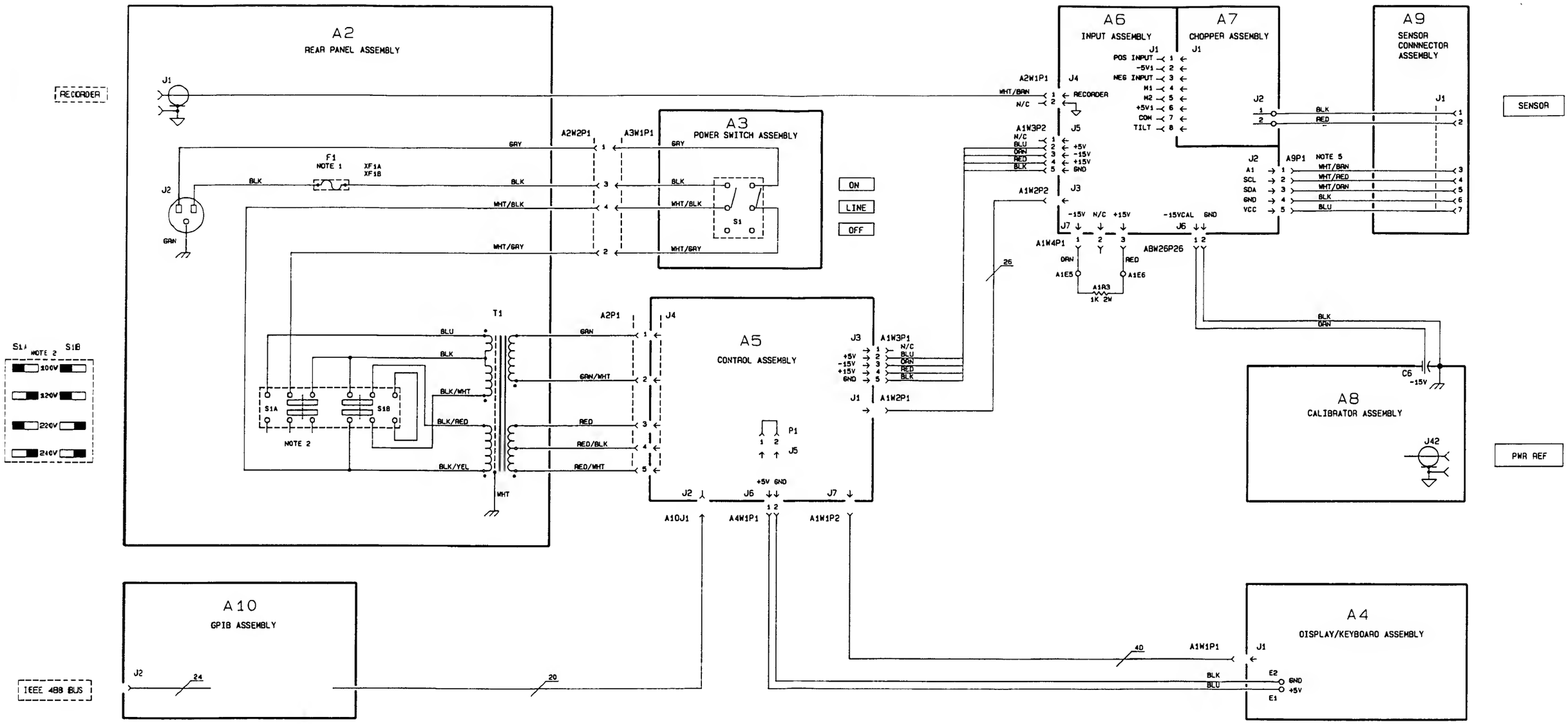

SCHEMATIC, A1 FRAME ASSEMBLY
83152312A, REV A

NOTES:
1. A2F1 FUSE VALUE IS 0.3A SLOW BLOW FOR 120 VOLT OPERATION; 0.15A SLOW BLOW FOR 240 VOLT OPERATION.
2. A2S1 LINE VOLTAGE SELECTOR IS SHOWN IN THE 120 VOLT POSITION.
3. A3S1 IS SHOWN IN THE 'ON' POSITION.
4. LABELS WITHIN SOLID BOXES ARE ON THE FRONT PANEL. LABELS WITHIN DOTTED BOXES ARE ON REAR PANEL.
5. A9P1 TO A9J1 ARE RESERVED CONNECTIONS.

Figure 8-1. Frame Assembly A1, Schematic Diagram

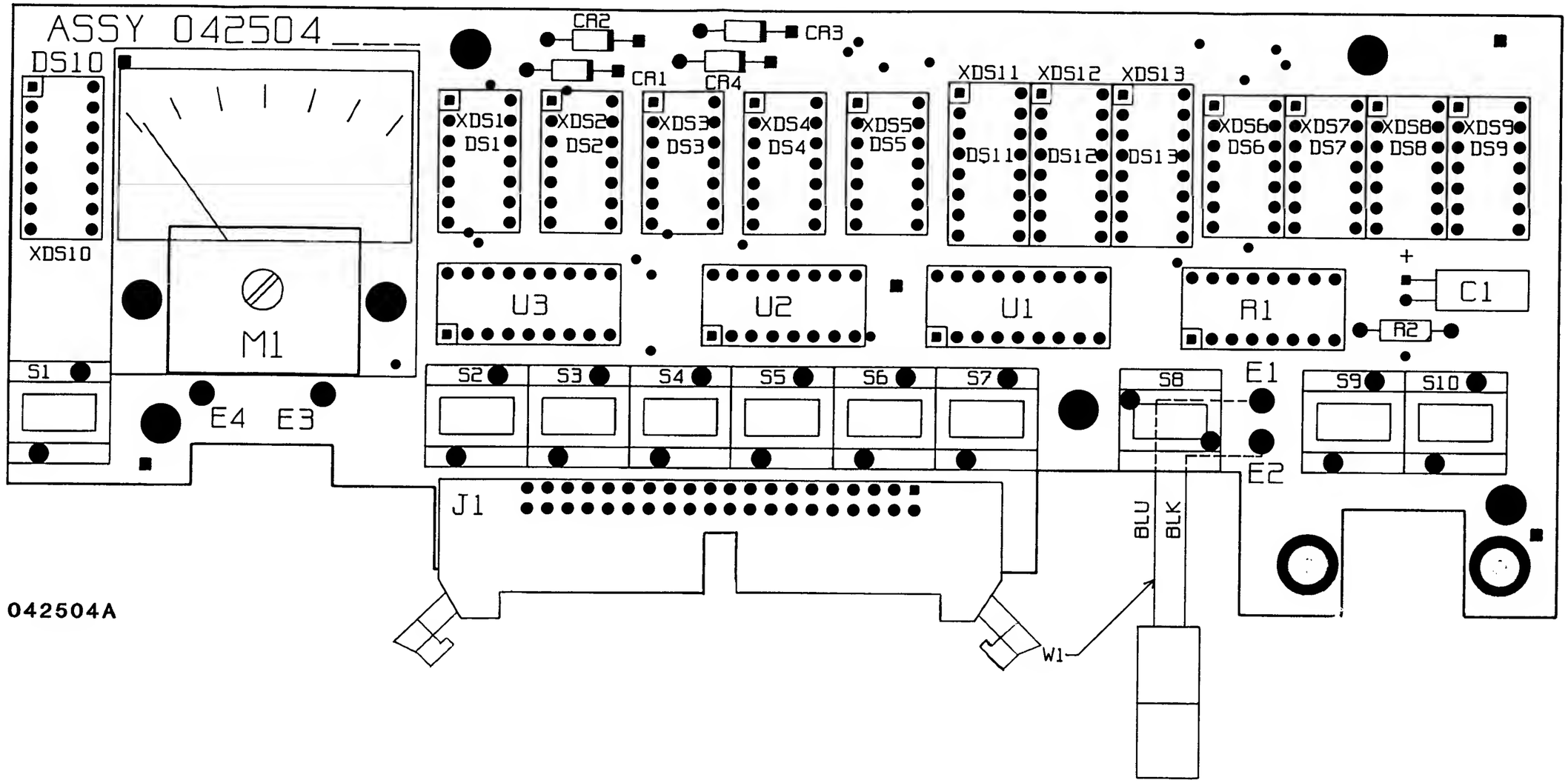

Figure 8-2. Display/Keyboard Assembly A4, Parts Location

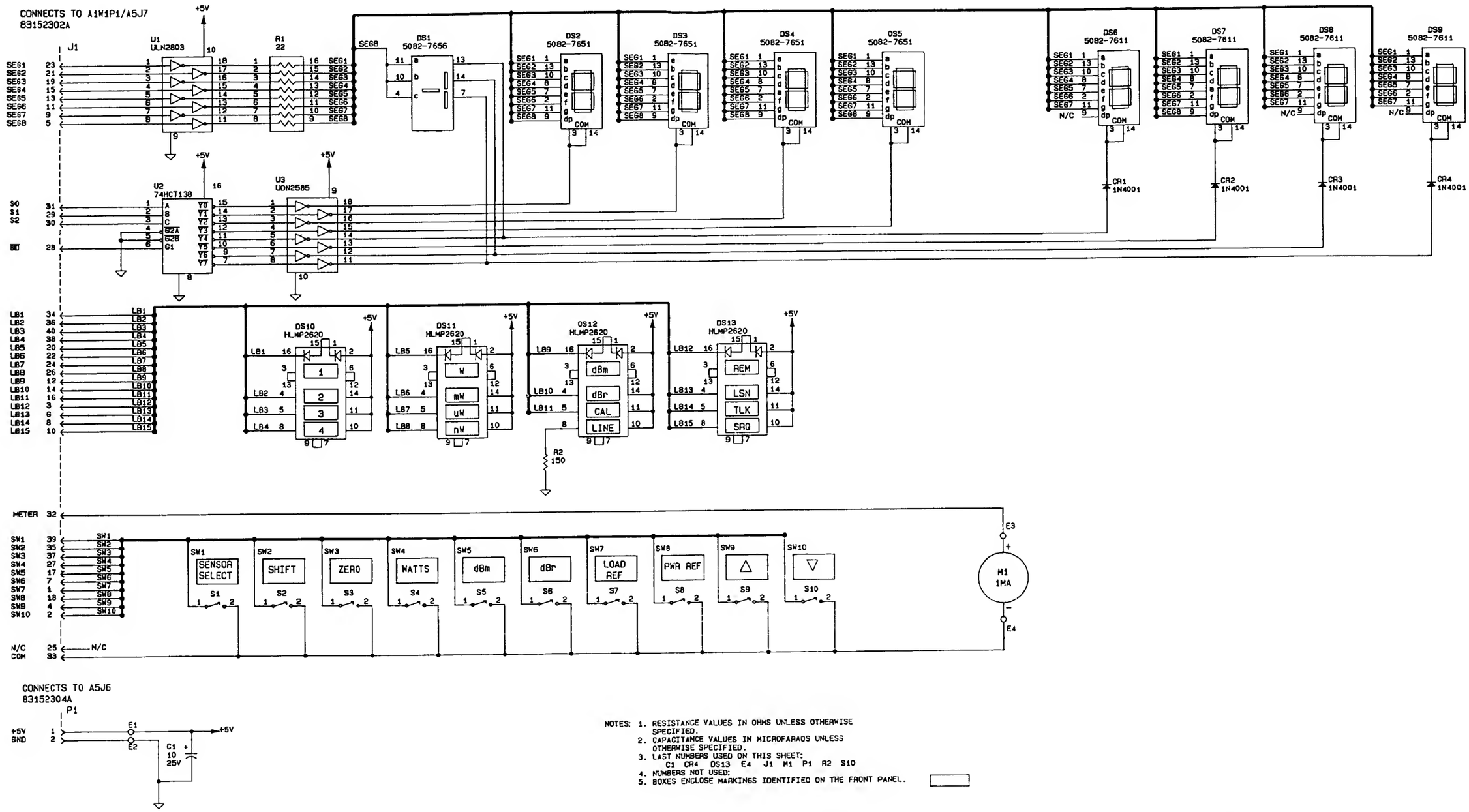

Figure 8-3. Display/Keyboard Assembly A4, Schematic Diagram

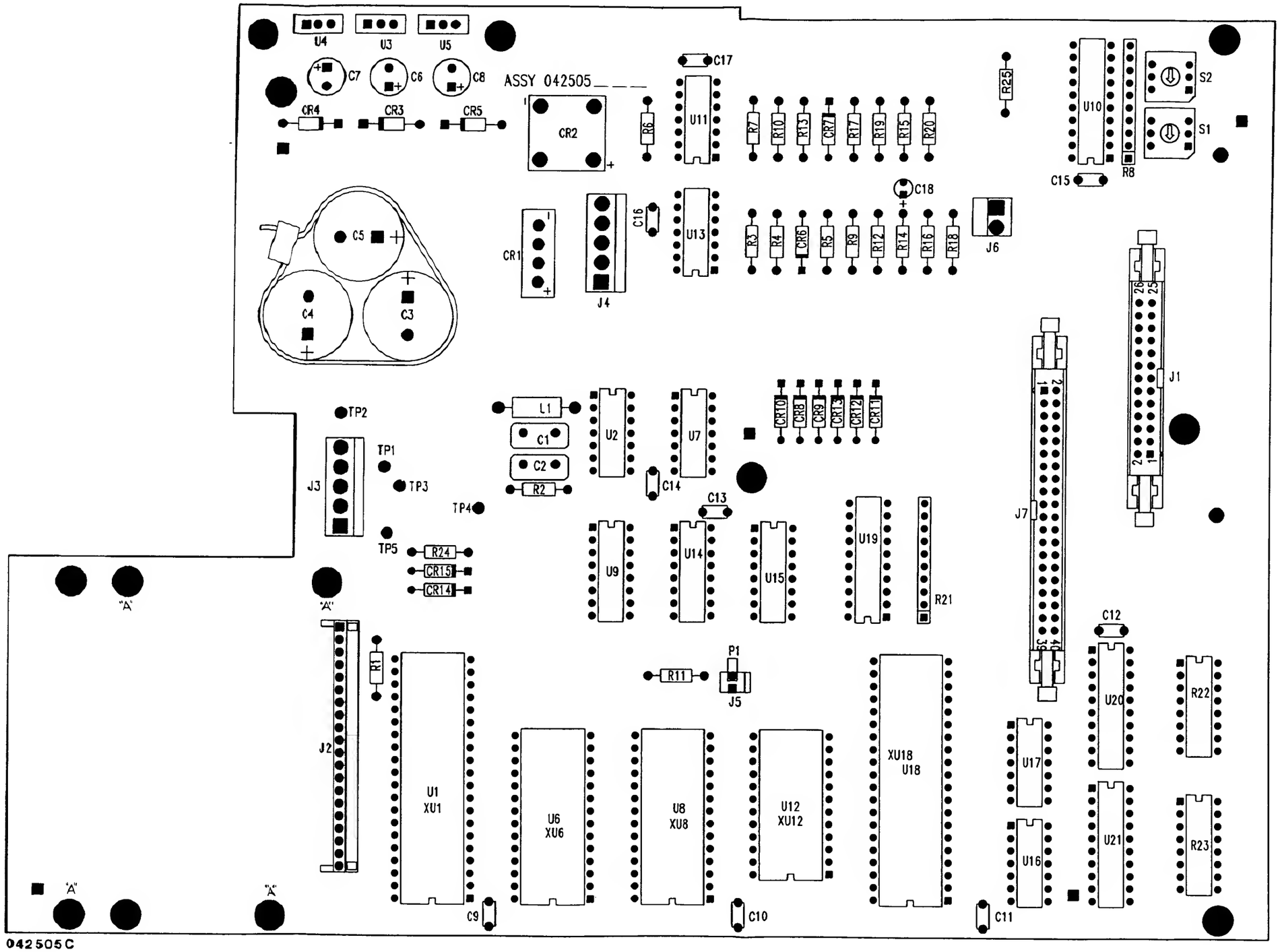

Figure 8-4. Control Assembly A5, Parts Location

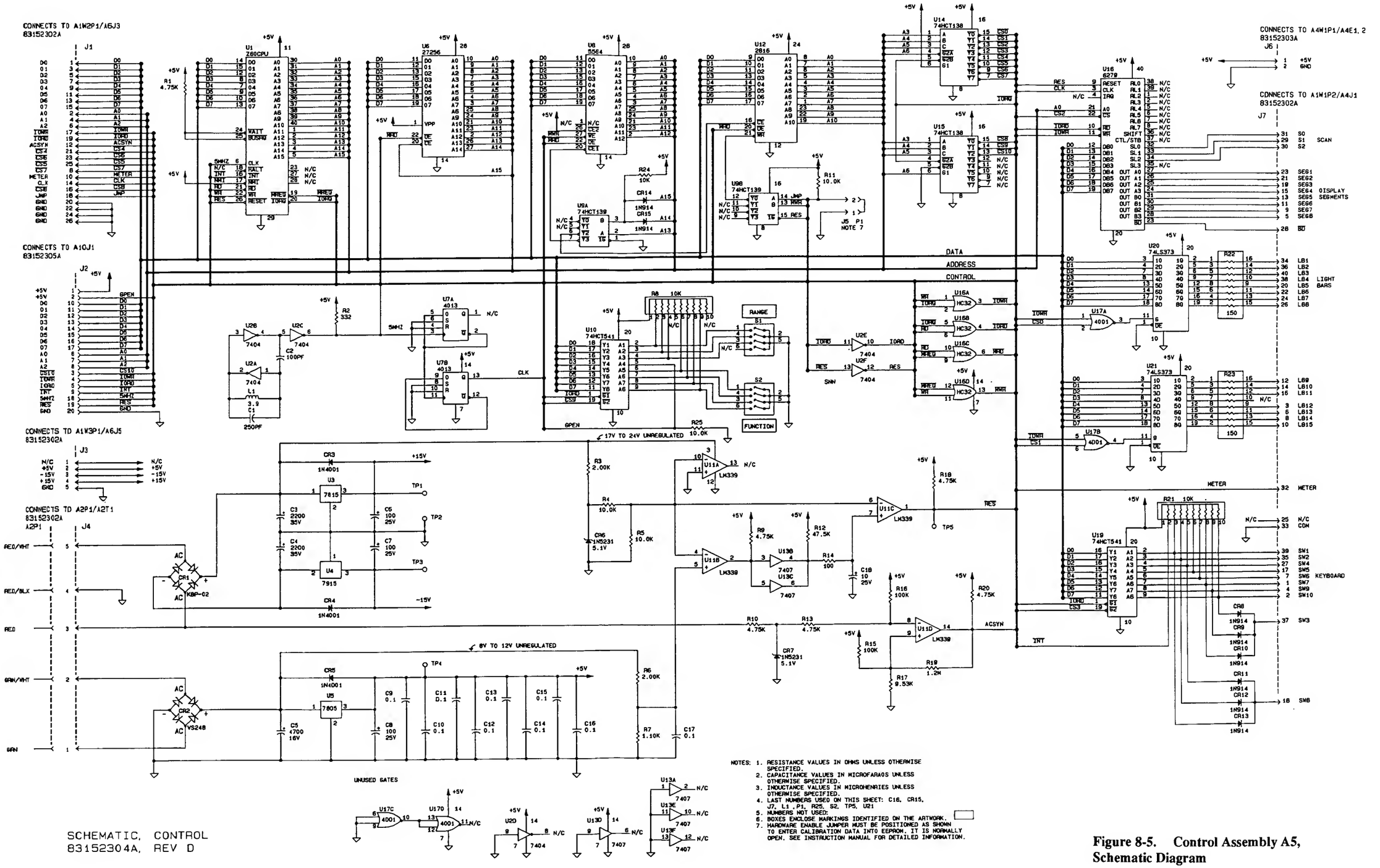

Figure 8-5. Control Assembly A5, Schematic Diagram

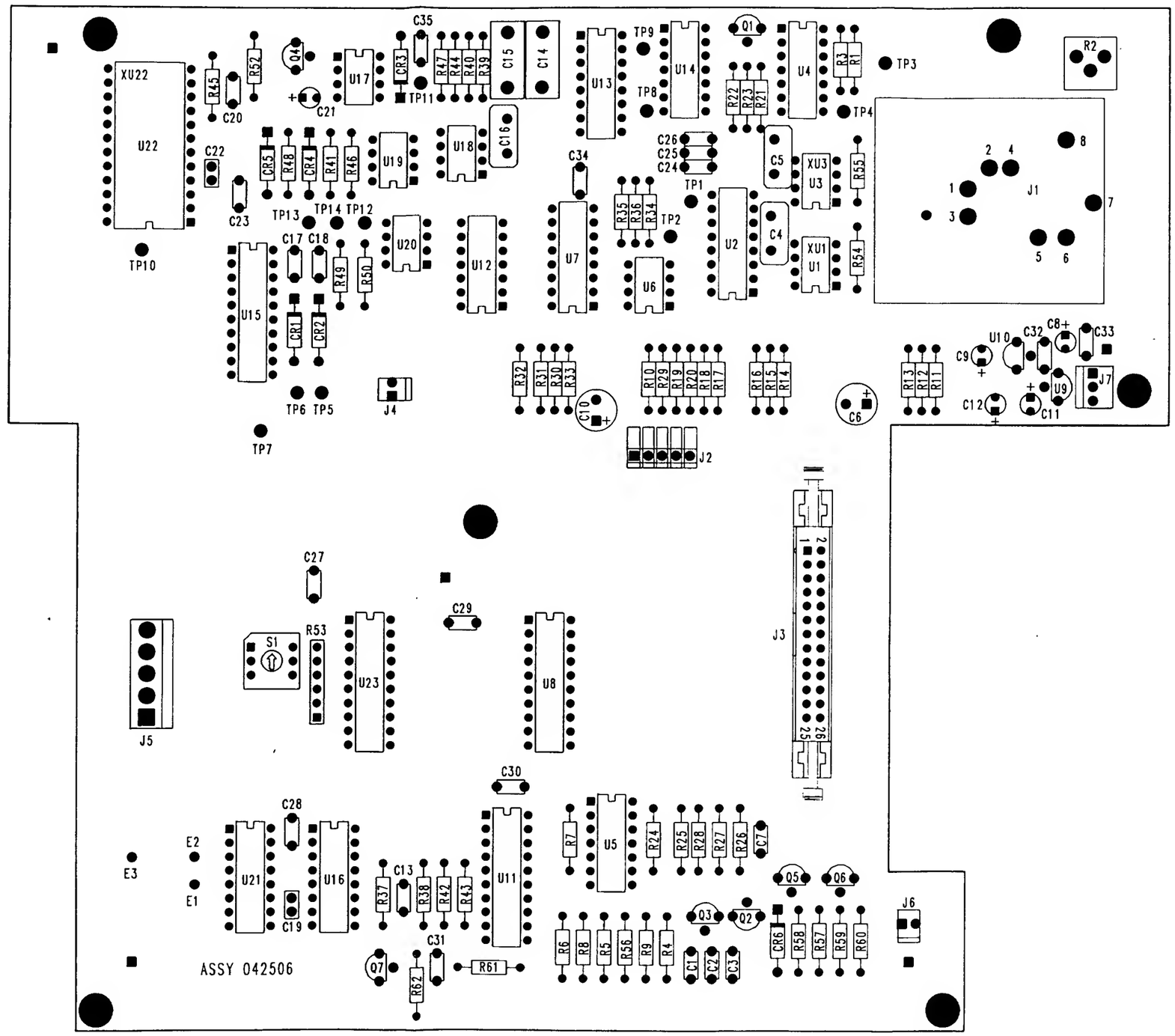

042506C

Figure 8-6. Input Assembly A6, Parts Location

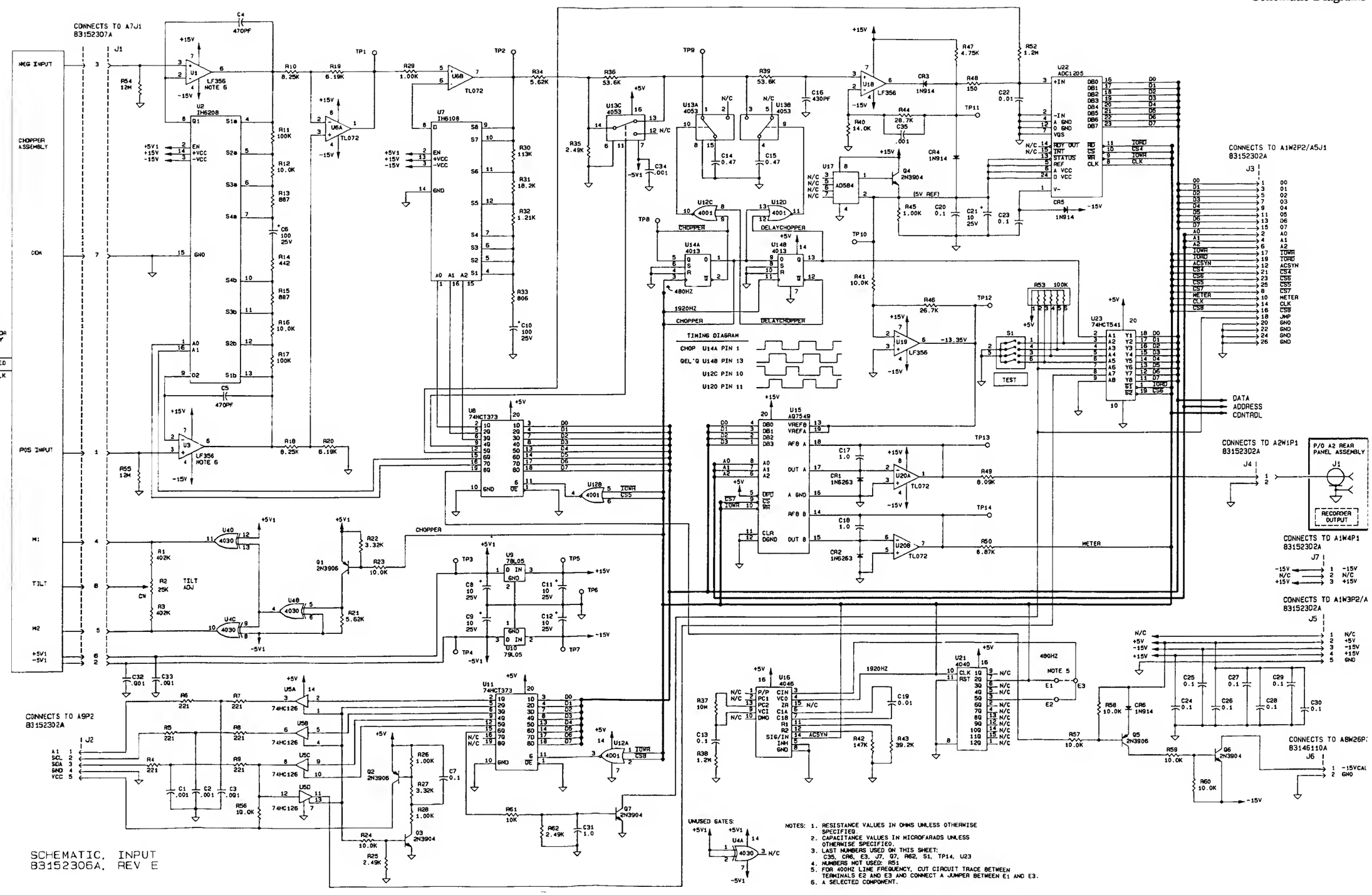

Figure 8-7. Input Assembly A6, Schematic Diagram

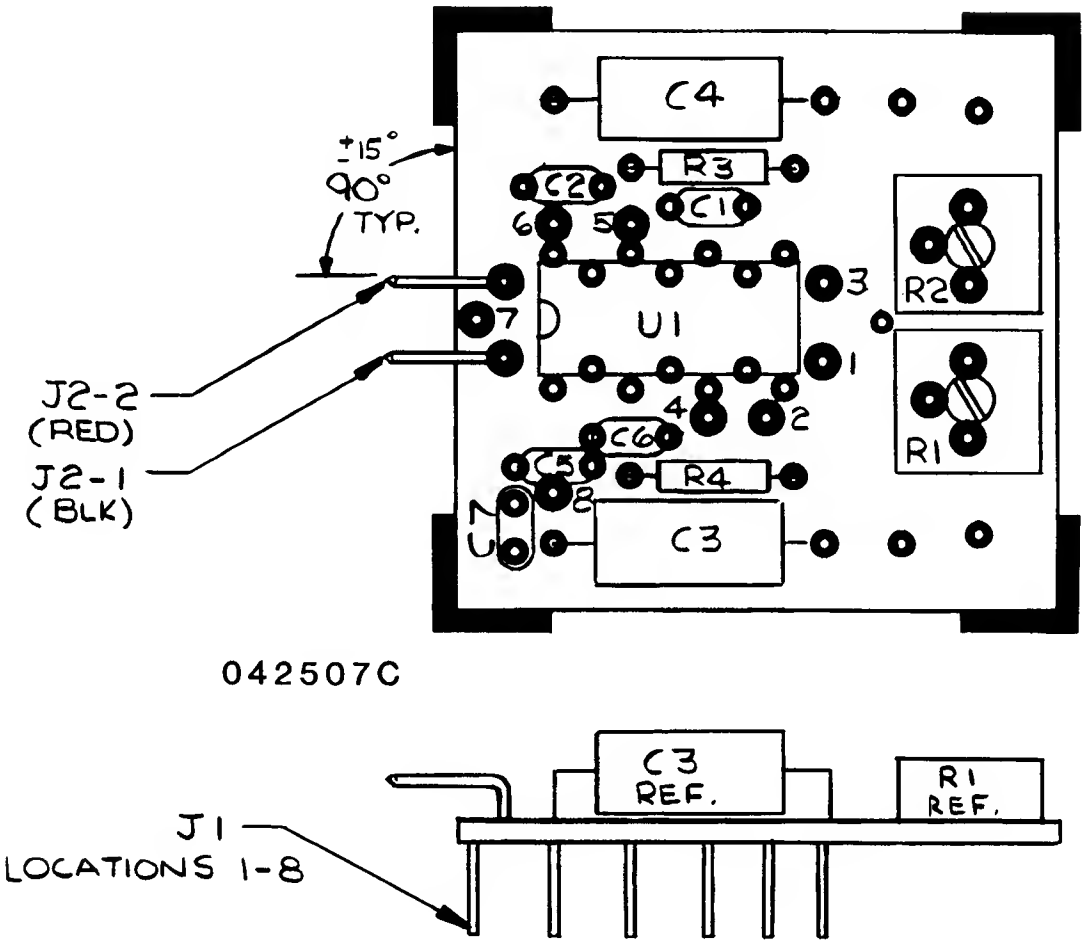

Figure 8-8. Chopper Assembly A7, Parts Location

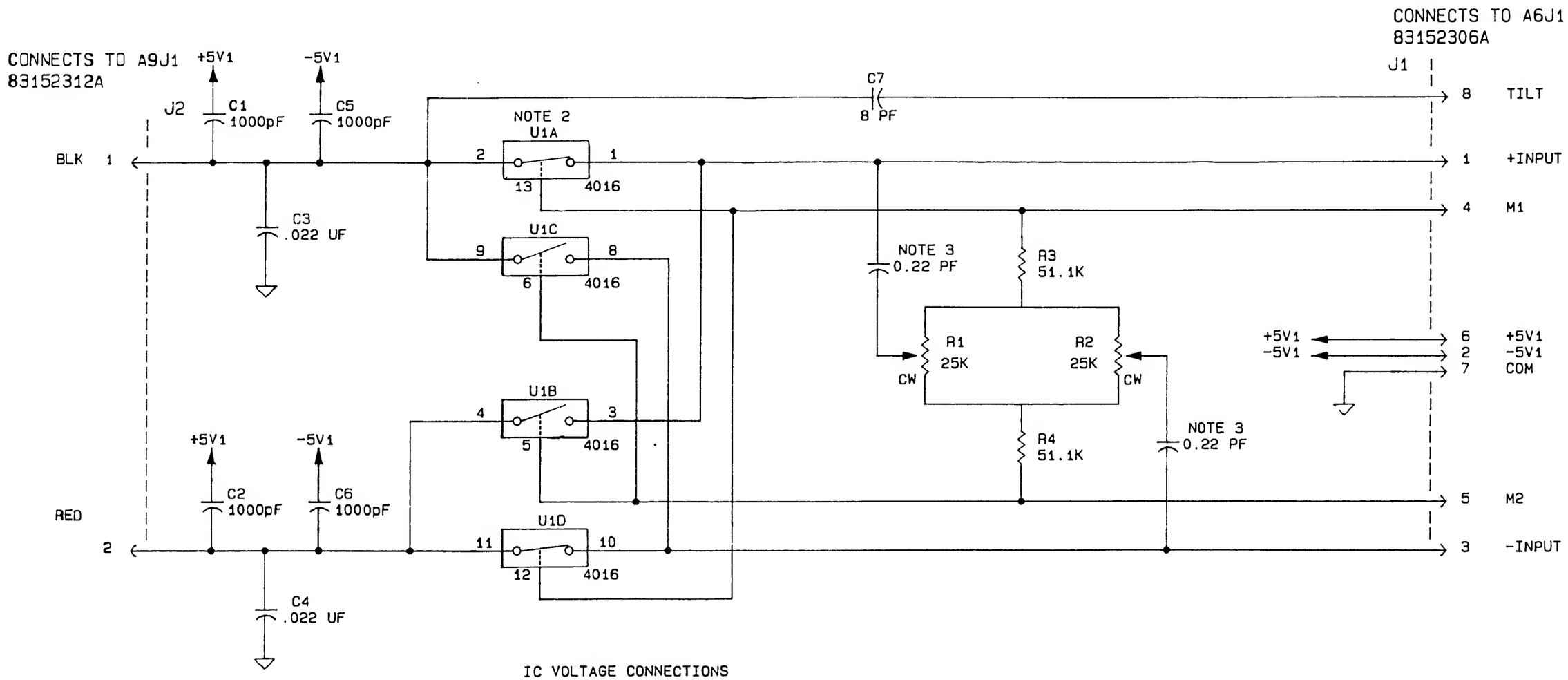

SCHEMATIC, CHOPPER
83152317A, REV A

IC VOLTAGE CONNECTIONS

REF. DESIG.	+5V1	-5V1
	PIN NOS.	
U1	14	7

NOTES:
1. RESISTANCE VALUES IN OHMS UNLESS OTHERWISE SPECIFIED.
2. A SELECTED COMPONENT
3. CAPACITOR IS PART OF PRINTED CIRCUIT BOARD.
4. LAST NUMBERS USED ON THIS SHEET: C7, J2, R4, U1.

Figure 8-9. Chopper Assembly A7, Schematic Diagram

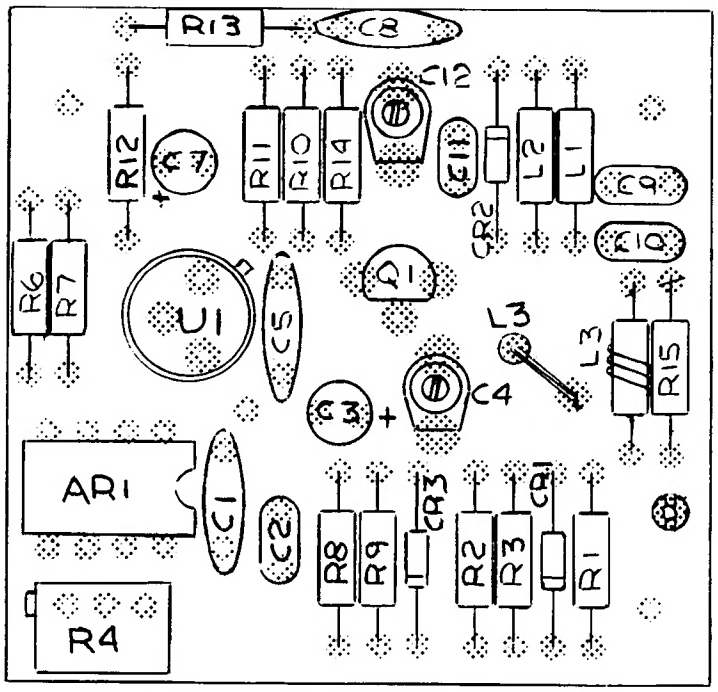

043131A

Figure 8-10. 50 MHz Calibrator Assembly A8, Parts Location

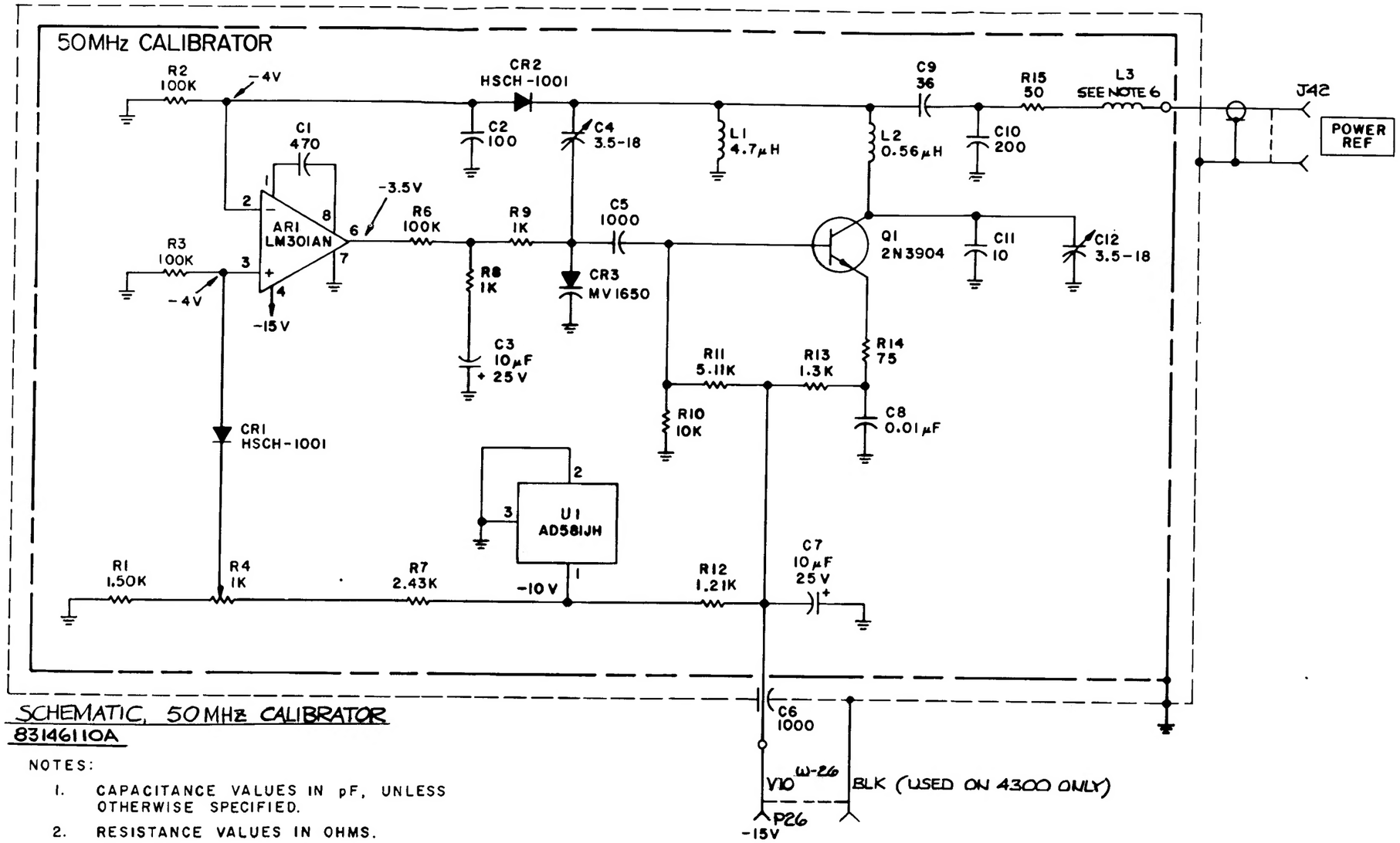

SCHEMATIC, 50 MHz CALIBRATOR
83146110A

NOTES:

1. CAPACITANCE VALUES IN pF, UNLESS OTHERWISE SPECIFIED.
2. RESISTANCE VALUES IN OHMS.
3. [ ] EXTERNAL MARKINGS.
4. LAST NUMBERS USED:
   C12 R15
5. NUMBERS NOT USED: R5
6. L3-.022μH USED ON 4300
   .033μH USED ON 4200A & 4200517

Figure 8-11. 50 MHz Calibrator Assembly A8, Schematic Diagram

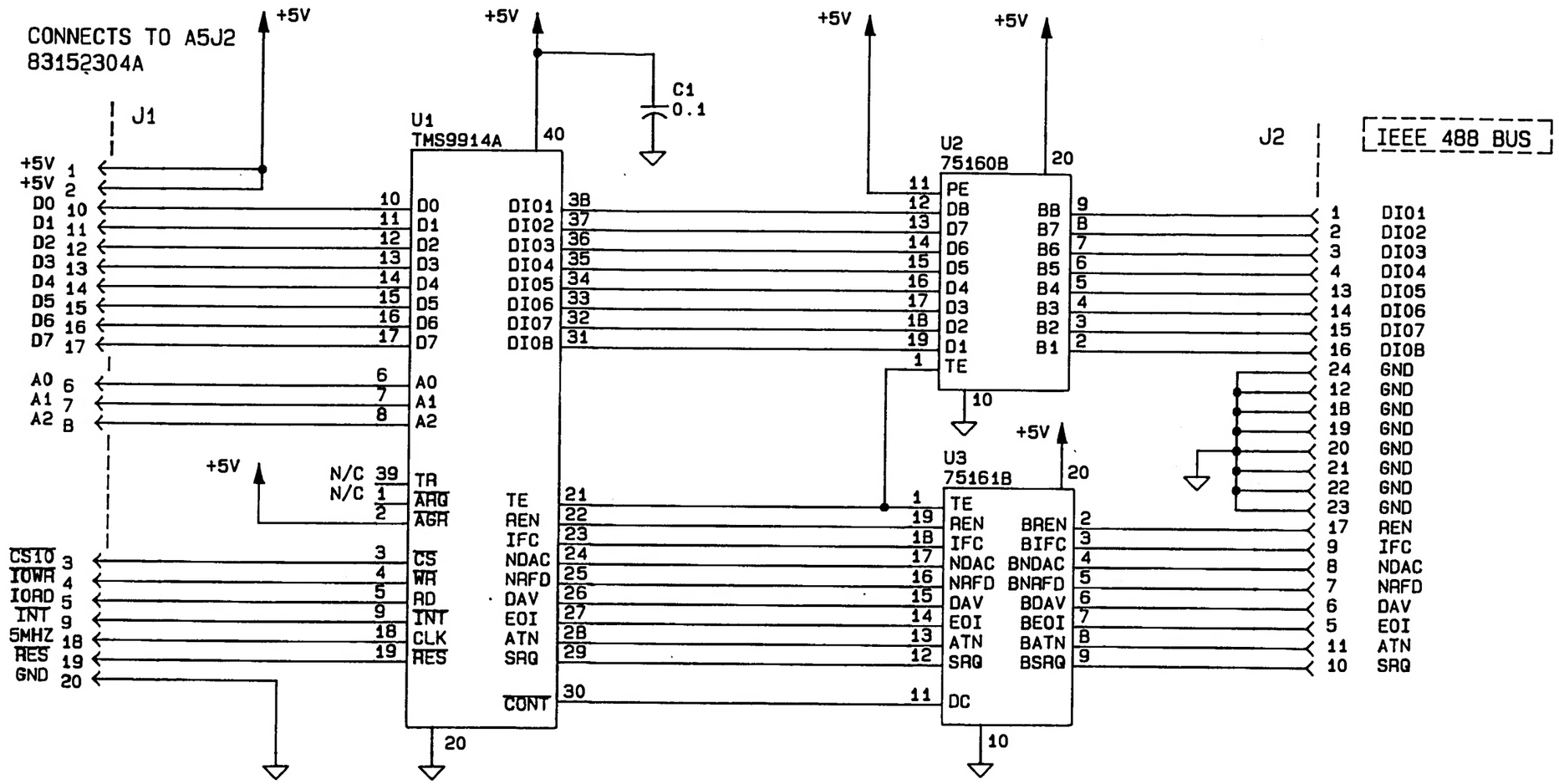

SCHEMATIC, GPIB
83152305A, REV B

NOTES: 1. CAPACITANCE VALUES IN MICROFARADS UNLESS OTHERWISE SPECIFIED.
2. LAST NUMBERS USED ON THIS SHEET: C1, J2, U3

Figure 8-13. GPIB Assembly A10, Schematic Diagram

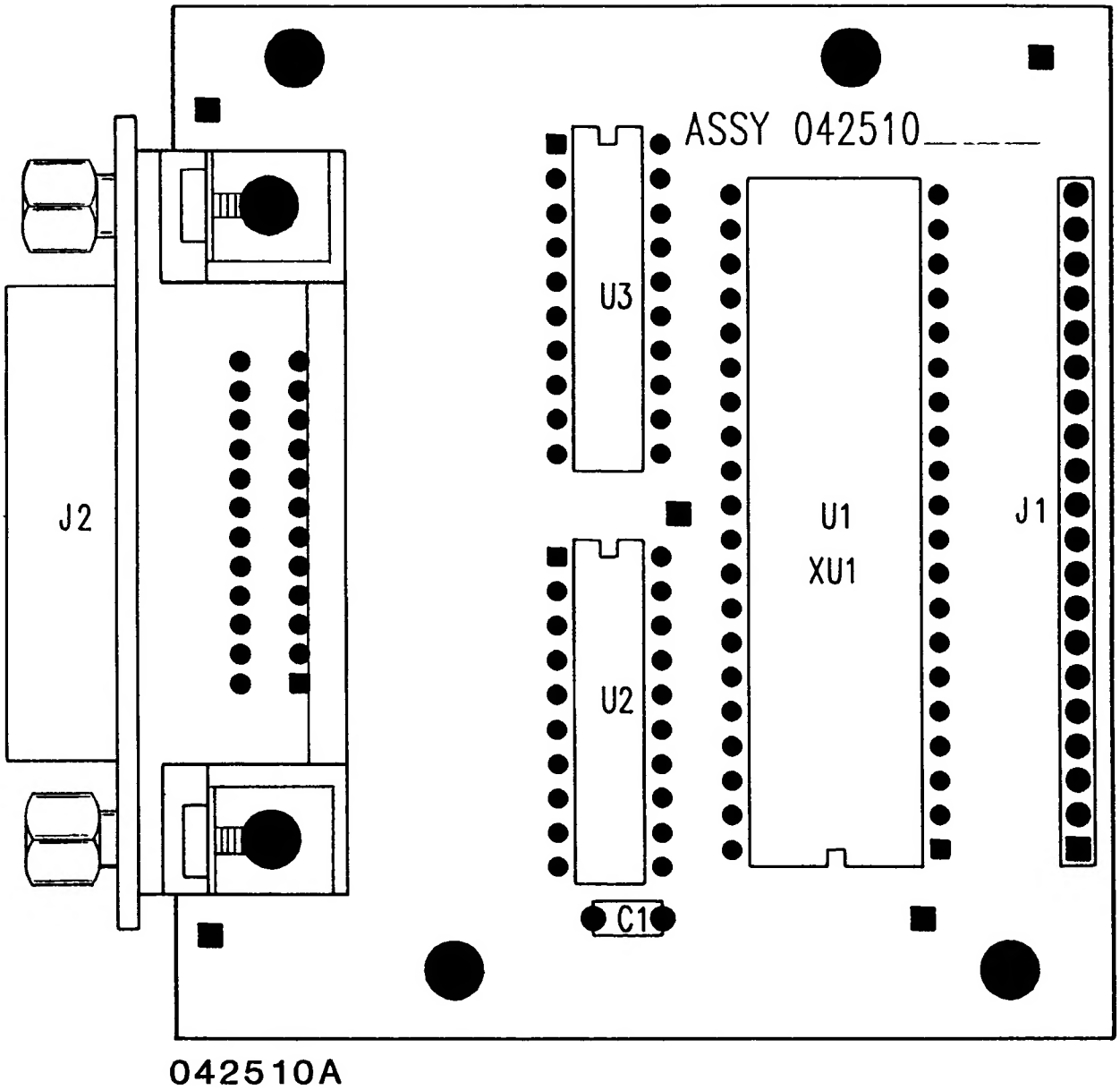

Figure 8-12. GPIB Assembly A10, Parts Location